C 05...M

P

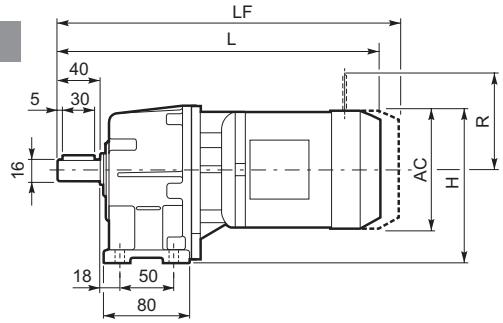

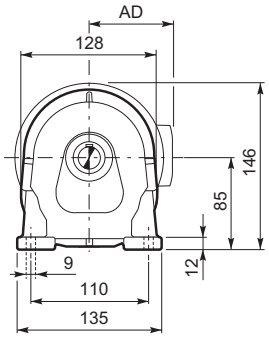

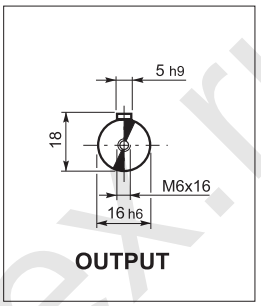

F

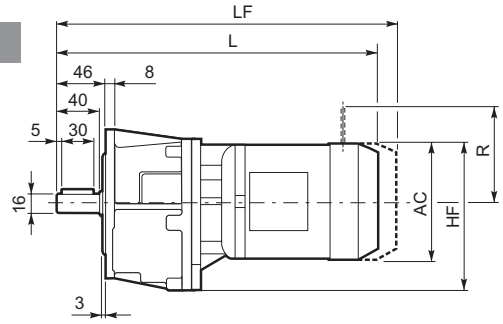

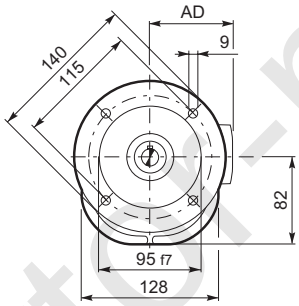

									M...FD M...FA		M...FD		M...FA	
			AC	H	HF	L	AD	Kg	LF	Kg	R	AD	R	AD
C 05 2	**S0**	**M0**	110	140	137	287	91	7	—	—	—	—	—	—
C 05 2	**S05**	**M05**	121	145.5	142.5	332	95	8	398	10	96	122	116	95
C 05 2	**S1**	**M1**	138	154	151	360.5	108	11	423	13	103	135	124	108

www.redukto-mex.ru

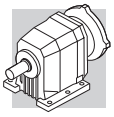

C 12...M

P

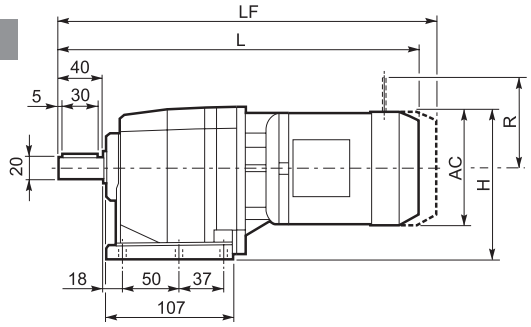

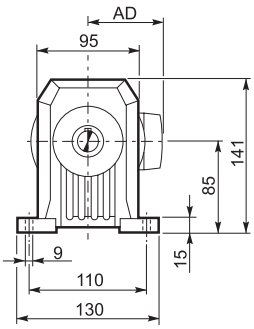

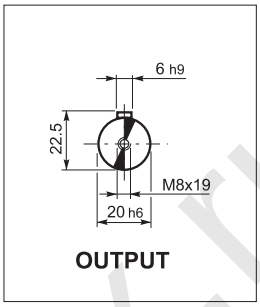

F

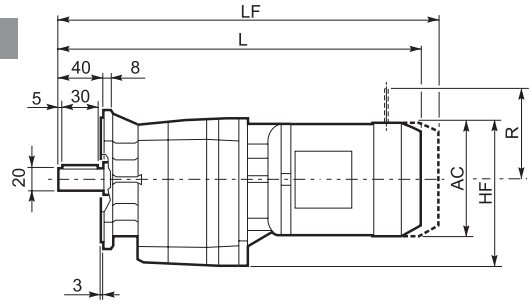

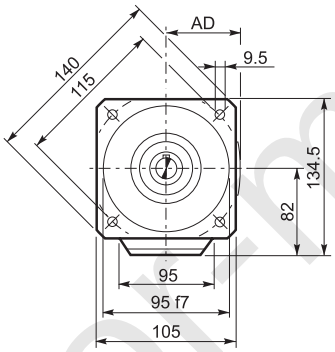

U

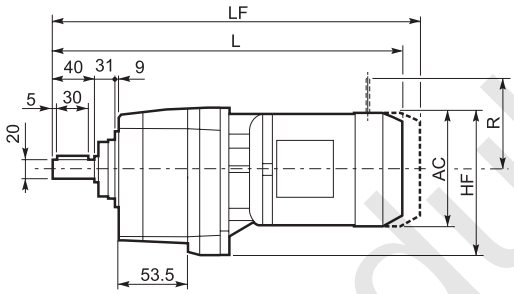

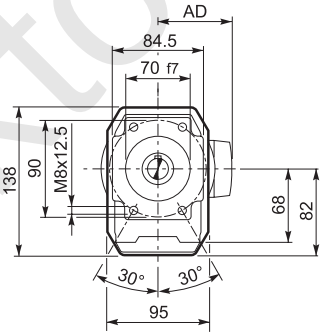

UF

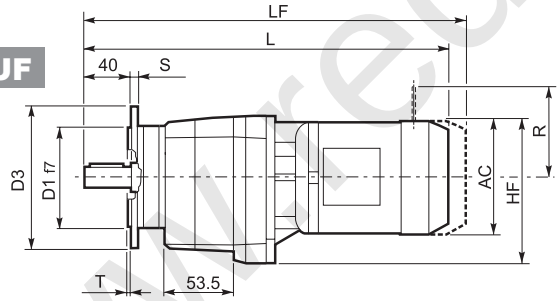

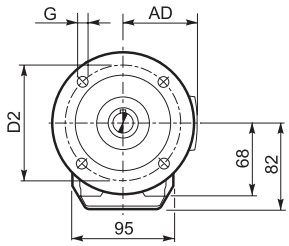

C 12 2_U						
	D1	D2	D3	G	T	S
FA	80	100	120	7	3	8
FB	95	115	140	9	3	10
FC	110	130	160	9	3	10

								M...FD M...FA		M...FD		M...FA	
			AC	H	HF	L	AD	Kg	LF	Kg	R	AD	R	AD
C 12 2	S05	M05	121	145.5	142.5	370.5	95	9	436.5	10	96	122	116	95
C 12 2	S1	M1	138	154	151	404.5	108	11	460.5	13	103	135	124	108
C 12 2	S2	M2S	156	163	160	428.5	119	15	498.5	18	129	146	134	119
C 12 2	S3	M3S	195	182.5	179.5	471.5	142	20	567.5	25	160	158	160	142
C 12 2	S3	M3L	195	182.5	179.5	503.5	142	22	594.5	27	160	158	160	142

www.redukto-mex.ru

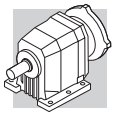

C 12...P (IEC)

P

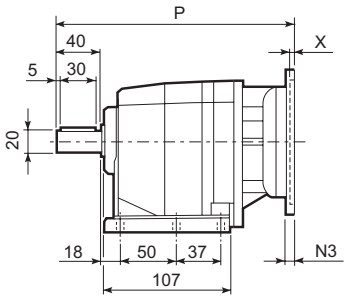

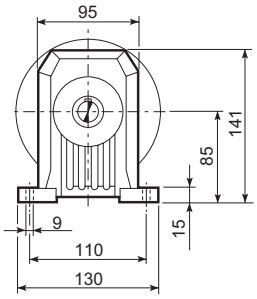

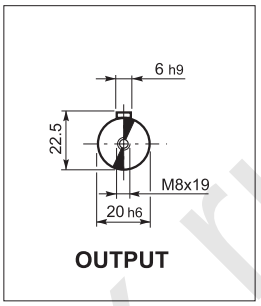

F

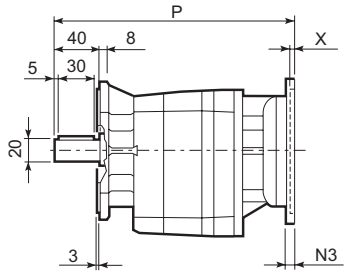

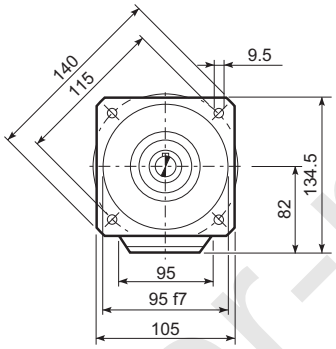

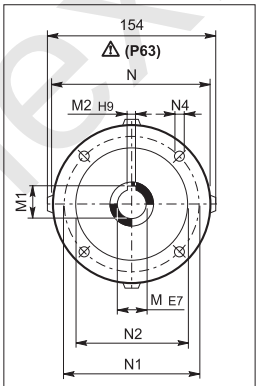

U

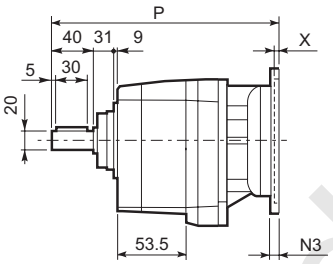

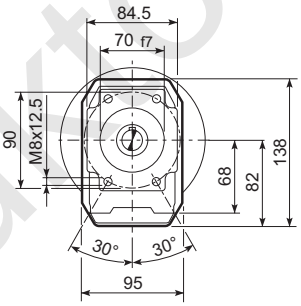

UF

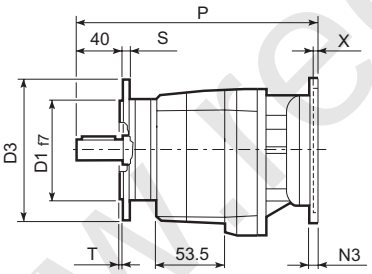

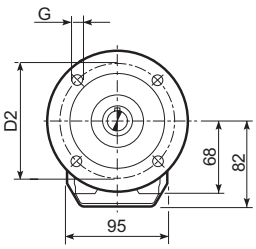

C 12 2_U						
	D1	D2	D3	G	T	S
FA	80	100	120	7	3	8
FB	95	115	140	9	3	10
FC	110	130	160	9	3	10

		M	M1	M2	N	N1	N2	N3	N4	X	P	Kg
C 12 2	**P63**	11	12.8	4	140	115	95	—	M8x19	4	244.5	6
C 12 2	**P71**	14	16.3	5	160	130	110	—	M8x16	4.5	244.5	6
C 12 2	**P80**	19	21.8	6	200	165	130	—	M10x12	4	264	7
C 12 2	**P90**	24	27.3	8	200	165	130	—	M10x12	4	264	7
C 12 2	**P100**	28	31.3	8	250	215	180	—	M12x16	4.5	274	11
C 12 2	**P112**	28	31.3	8	250	215	180	—	M12x16	4.5	274	11

www.reduktor-mex.ru

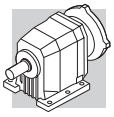

C 12...SK / SC

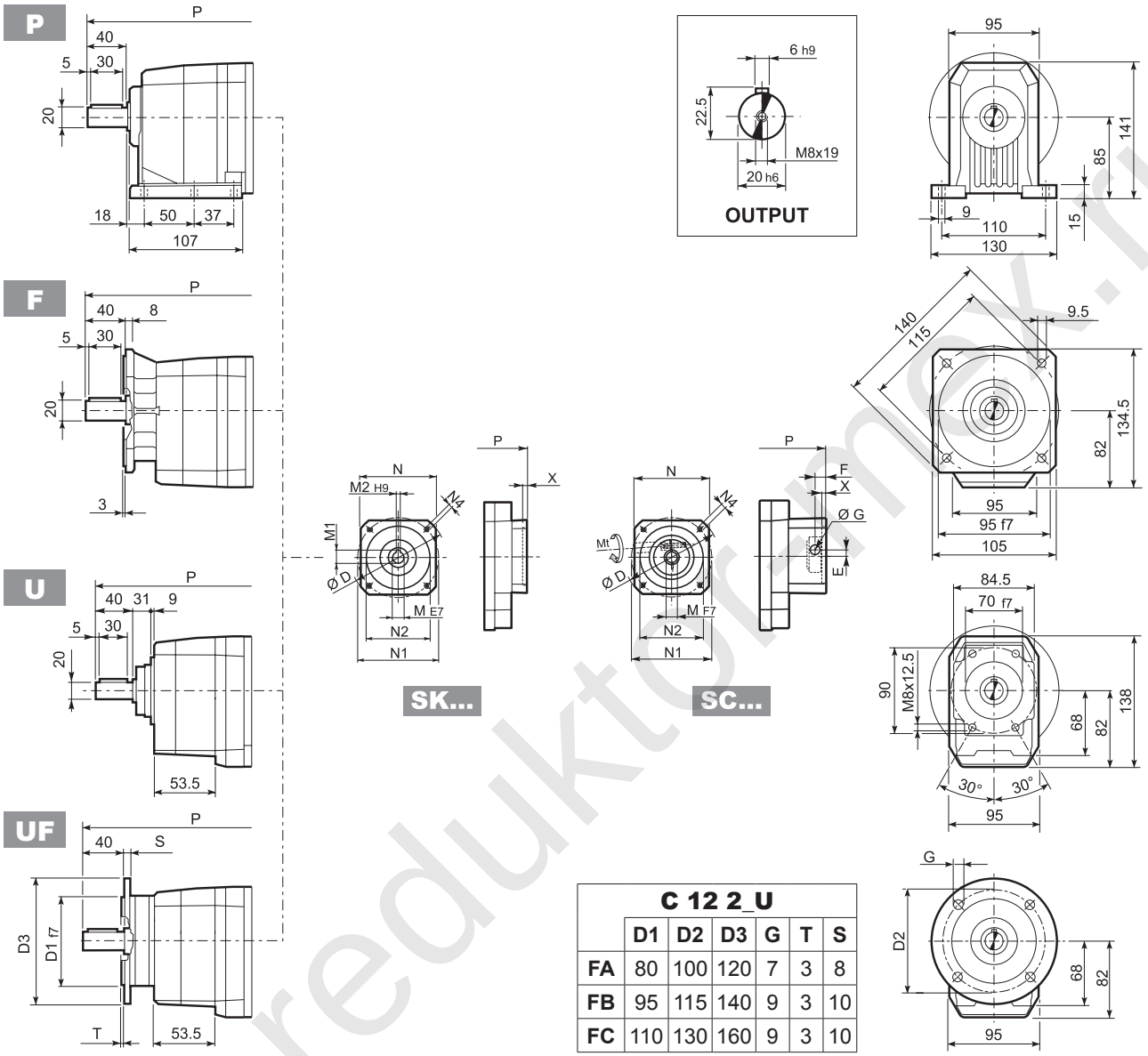

C 12 2_U	D1	D2	D3	G	T	S
FA	80	100	120	7	3	8
FB	95	115	140	9	3	10
FC	110	130	160	9	3	10

		D	M	M1	M2	N	N1	N2	N4	X	P	Kg
C 12 2	SK60A	102	11	12.8	4	82	75	60	M5x10	3.5	216	6
C 12 2	SK60B	102	14	16.3	5	82	75	60	M5x10	4	223	5
C 12 2	SK80A	115	14	16.3	5	90	100	80	M6x12	4	223	5
C 12 2	SK80C	120	19	21.8	6	96	100	80	M6x12	4	264	7
C 12 2	SK95A	130	14	16.3	5	102	115	95	M8x12	4	264	6
C 12 2	SK95B	130	19	21.8	6	102	115	95	M8x12	4	264	7
C 12 2	SK95C	130	24	27.3	8	102	115	95	M8x12	4	264	7
C 12 2	SK110A	150	19	21.8	6	120	130	110	M8x12	5	264	7
C 12 2	SK110B	150	24	27.3	8	120	130	110	M8x12	5	264	7

		Mt	D	E	F	G	M	N	N1	N2	N4	X	P	Kg
C 12 2	SC60A	M6 15 Nm	102	7	12.5	12.5	11	82	75	60	M5x10	4	243	7
C 12 2	SC60B	M6 15 Nm	102	7	12.5	12.5	14	82	75	60	M5x10	4	243	6
C 12 2	SC80A	M6 15 Nm	115	6	12.5	12.5	14	90	100	80	M6x12	4	243	6
C 12 2	SC80C	M6 15 Nm	120	15.5	14.5	17.75	19	96	100	80	M6x12	4	287.5	8
C 12 2	SC95A	M6 15 Nm	130	16.5	15	17.75	14	102	115	95	M8x16	4	287.5	7
C 12 2	SC95B	M6 15 Nm	130	16.5	15	17.75	19	102	115	95	M8x16	4	287.5	8
C 12 2	SC95C	M6 15 Nm	130	16.5	15	17.75	24	102	115	95	M8x16	4	287.5	8
C 12 2	SC110A	M6 15 Nm	150	16.5	16	17.75	19	120	130	110	M8x16	5	287.5	10
C 12 2	SC110B	M6 15 Nm	150	16.5	16	17.75	24	120	130	110	M8x16	5	287.5	10

www.redukt-orpnek.ru

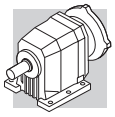

C 12...HS

P

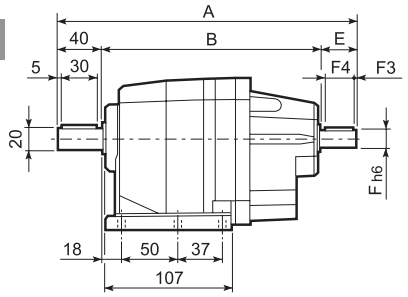

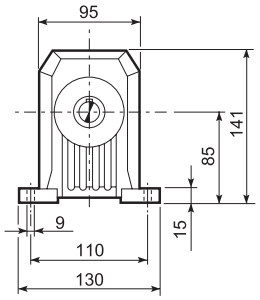

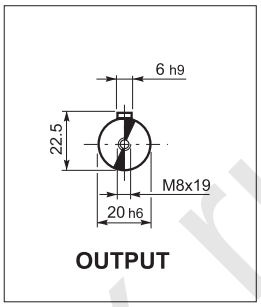

F

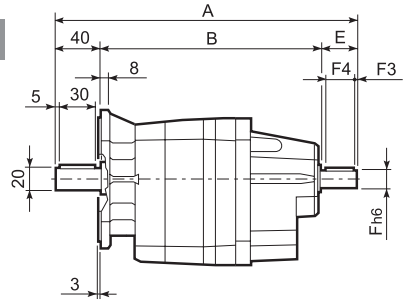

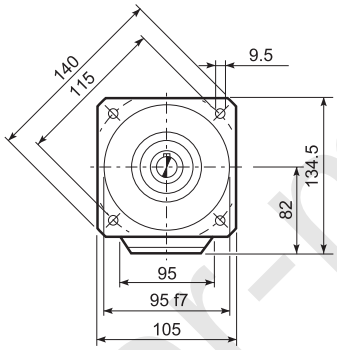

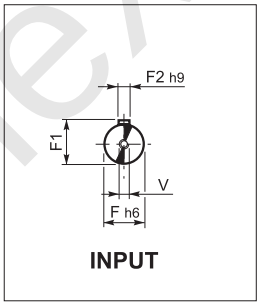

U

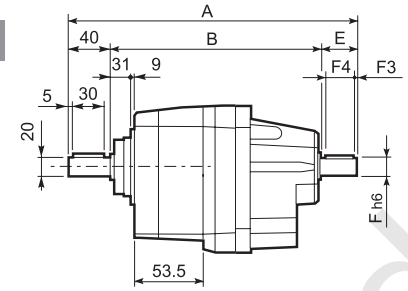

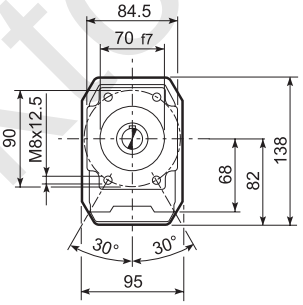

UF

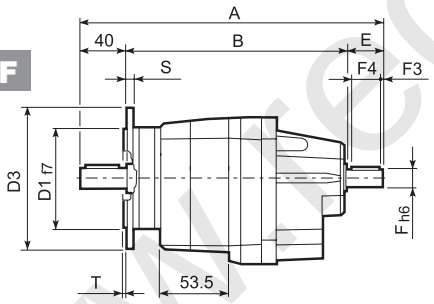

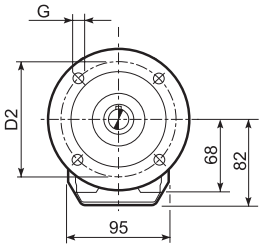

C 12 2_U						
	D1	D2	D3	G	T	S
FA	80	100	120	7	3	8
FB	95	115	140	9	3	10
FC	110	130	160	9	3	10

		A	B	E	F	F1	F2	F3	F4	V	Kg
C 12 2	HS	251.5	171.5	40	16	18	5	2.5	35	M6x16	7.8

www.redukto-rnex.ru

C 22...M

P

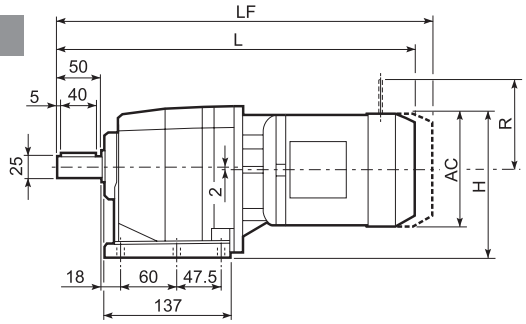

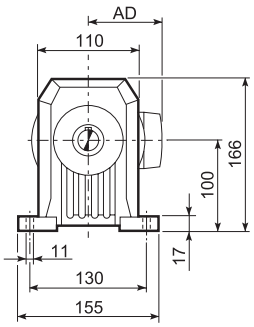

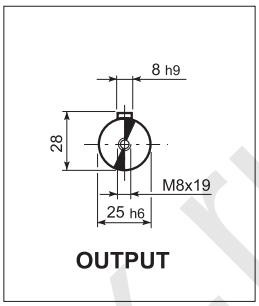

F

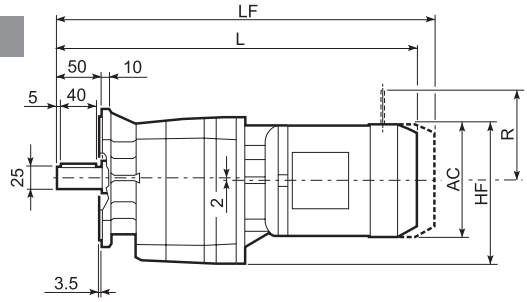

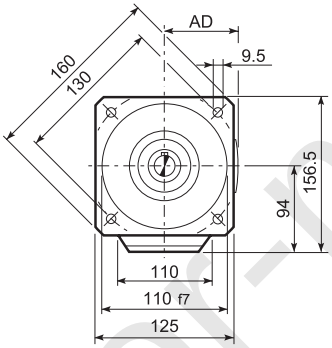

U

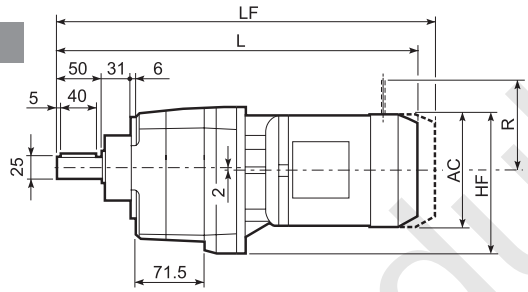

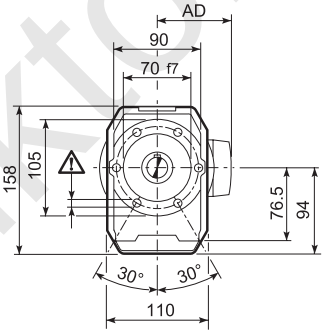

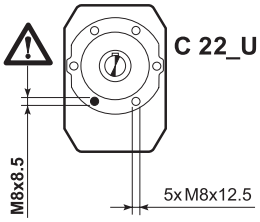

UF

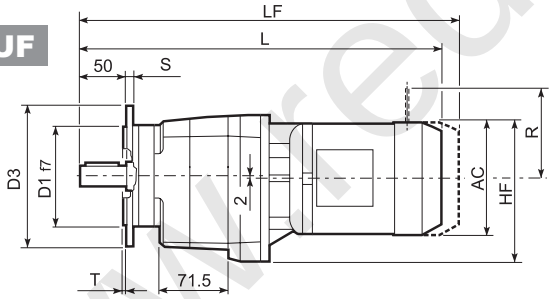

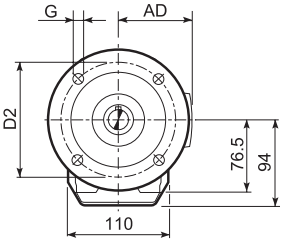

C 22_U						
	D1	D2	D3	G	T	S
FA	95	115	140	9	3	10
FB	110	130	160	9	3	10
FC	130	165	200	11	3.5	11

								M...FD M...FA		M...FD		M...FA	
			AC	H	HF	L	AD	Kg	LF	Kg	R	AD	R	AD
C 22 2	S05	M05	121	160.5	154.5	399	95	8	465	10	96	119	116	95
C 22 2	S1	M1	138	169	163	428	108	11	489	14	103	135	124	108
C 22 2	S2	M2S	156	178	170	456	119	16	527	19	129	146	134	119
C 22 2	S3	M3S	195	197.5	191.5	500	142	21	596	26	160	158	160	142
C 22 2	S3	M3L	195	197.5	191.5	532	142	27	623	32	160	158	160	142
C 22 3	S05	M05	121	160.5	154.5	454.5	95	11	520.5	12	96	122	116	95
C 22 3	S1	M1	138	169	163	483.5	108	13	544.5	15	103	135	124	108
C 22 3	S2	M2S	156	178	170	511.5	119	18	582.5	21	129	146	134	119
C 22 3	S3	M3S	195	197.5	191.5	555.5	142	23	601.5	28	160	158	160	142
C 22 3	S3	M3L	195	197.5	191.5	587.5	142	29	678.5	34	160	158	160	142

www.redukton-inex.ru

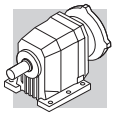

C 22...P(IEC)

P

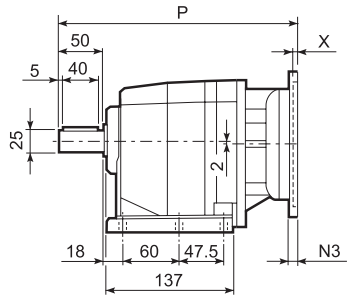

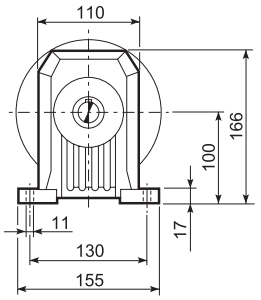

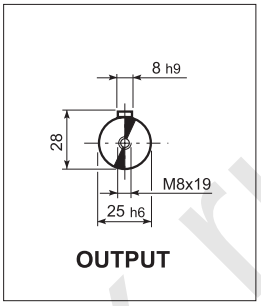

F

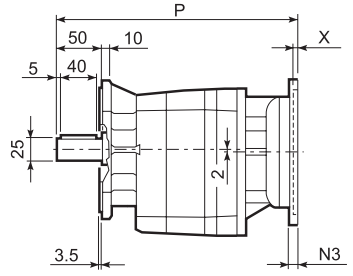

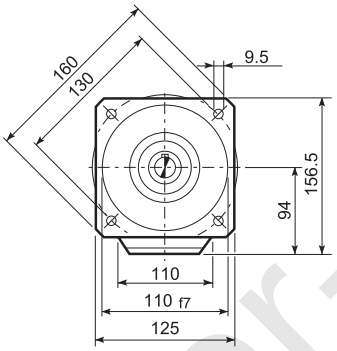

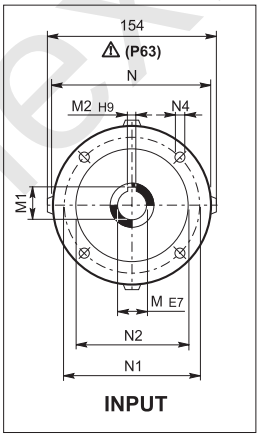

U

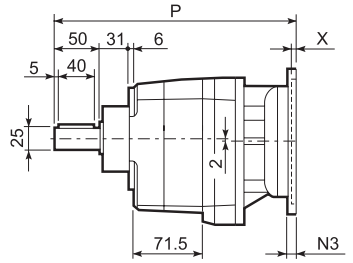

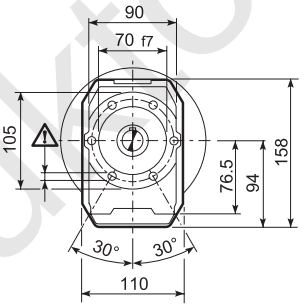

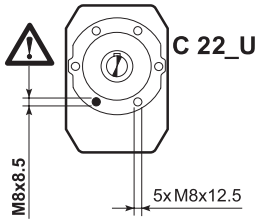

UF

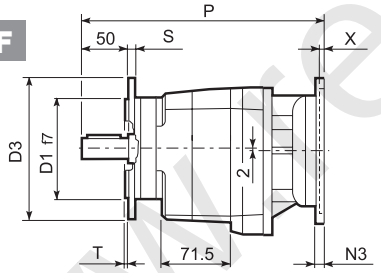

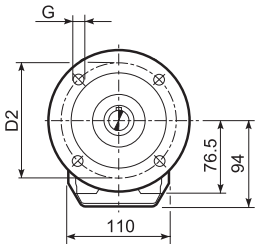

C 22_U					
	D1	D2	D3	G	T	S
FA	95	115	140	9	3	10
FB	110	130	160	9	3	10
FC	130	165	200	11	3.5	11

		M	M1	M2	N	N1	N2	N3	N4	X	P	Kg
C 22 2	**P63**	11	12.8	4	140	115	95	—	M8x19	4	273	7
C 22 2	**P71**	14	16.3	5	160	130	110	—	M8x16	4.5	273	7
C 22 2	**P80**	19	21.8	6	200	165	130	—	M10x12	4	292.5	8
C 22 2	**P90**	24	27.3	8	200	165	130	—	M10x12	4	292.5	8
C 22 2	**P100**	28	31.3	8	250	215	180	—	M12X16	4.5	302.5	12
C 22 2	**P112**	28	31.3	8	250	215	180	—	M12X16	4.5	302.5	12
C 22 3	**P63**	11	12.8	4	140	115	95	—	M8x19	4	328.5	8
C 22 3	**P71**	14	16.3	5	160	130	110	—	M8x16	4.5	328.5	8
C 22 3	**P80**	19	21.8	6	200	165	130	—	M10x12	4	348	9
C 22 3	**P90**	24	27.3	8	200	165	130	—	M10x12	4	348	9
C 22 3	**P100**	28	31.3	8	250	215	180	—	M12x16	4.5	358	13
C 22 3	**P112**	28	31.3	8	250	215	180	—	M12x16	4.5	358	13

www.redukt0r-mex.ru

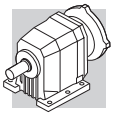

C 22...SK / SC

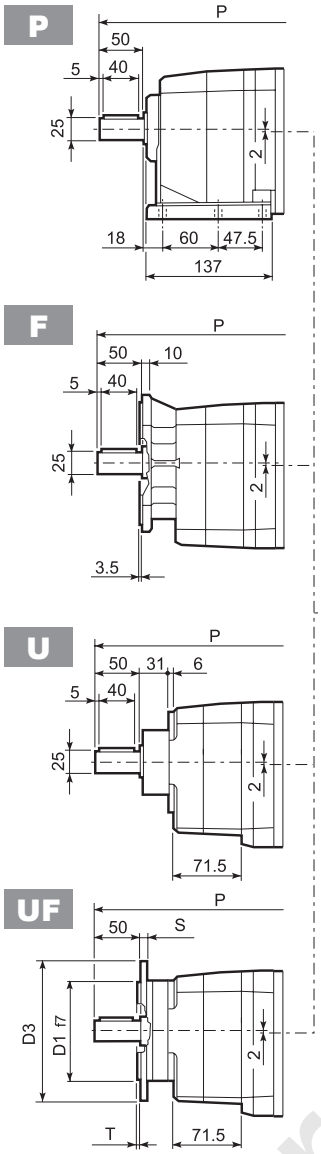

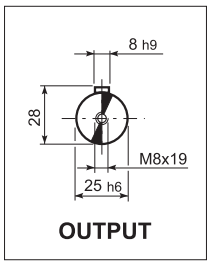

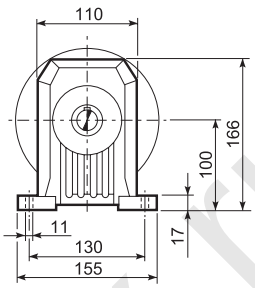

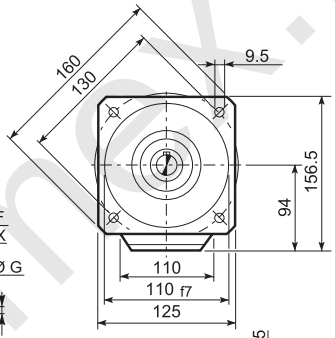

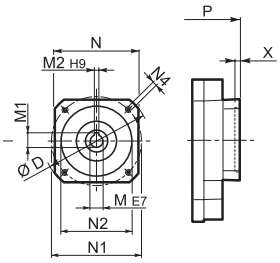

SK...

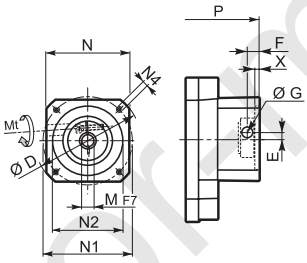

SC...

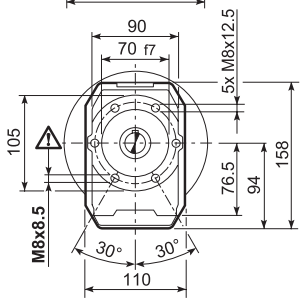

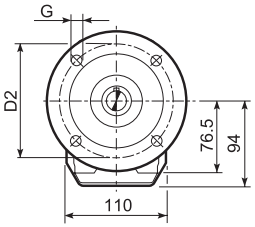

C 22_U	D1	D2	D3	G	T	S
FA	95	115	140	9	3	10
FB	110	130	160	9	3	10
FC	130	165	200	11	3.5	11

		D	M	M1	M2	N	N1	N2	N4	X	P 2x	P 3x	Kg
C 22 2/3	SK60A*	102	11	12.8	4	82	75	60	M5x10	3.5	224.5	300	6/9
C 22 2/3	SK60B*	102	14	16.3	5	82	75	60	M5x10	4	251.5	307	7/8
C 22 2/3	SK80A*	115	14	16.3	5	90	100	80	M6x12	4	251.5	307	7/8
C 22 2/3	SK80C	120	19	21.8	6	96	100	80	M6x12	4	292.5	348	8/9
C 22 2/3	SK95A	130	14	16.3	5	102	115	95	M8x12	4	292.5	348	8/9
C 22 2/3	SK95B	130	19	21.8	6	102	115	95	M8x12	4	292.5	348	8/9
C 22 2/3	SK95C	130	24	27.3	8	102	115	95	M8x12	4	292.5	348	8/9
C 22 2/3	SK110A	150	19	21.8	6	120	130	110	M8x12	5	292.5	348	8/9
C 22 2/3	SK110B	150	24	27.3	8	120	130	110	M8x12	5	292.5	348	8/9

			Mt	D	E	F	G	M	N	N1	N2	N4	X	P 2x	P 3x	Kg
C 22 2/3	SC60A*	M6	15 Nm	102	7	12.5	12.5	11	82	75	60	M5x10	4	271.5	327	7/8
C 22 2/3	SC60B*	M6	15 Nm	102	7	12.5	12.5	14	82	75	60	M5x10	4	271.5	327	8/9
C 22 2/3	SC80A*	M6	15 Nm	115	6	12.5	12.5	14	90	100	80	M6x12	4	271.5	327	8/9
C 22 2/3	SC80C	M6	15 Nm	120	15.5	14.5	17.75	19	96	100	80	M6x12	4	316	371.5	9/10
C 22 2/3	SC95A	M6	15 Nm	130	16.5	15	17.75	14	102	115	95	M8x16	4	316	371.5	9/10
C 22 2/3	SC95B	M6	15 Nm	130	16.5	15	17.75	19	102	115	95	M8x16	4	316	371.5	9/10
C 22 2/3	SC95C	M6	15 Nm	130	16.5	15	17.75	24	102	115	95	M8x16	4	316	371.5	9/10
C 22 2/3	SC110A	M6	15 Nm	150	16.5	16	17.75	19	120	130	110	M8x16	5	316	371.5	10/11
C 22 2/3	SC110B	M6	15 Nm	150	16.5	16	17.75	24	120	130	110	M8x16	5	316	371.5	10/11

* Для получения консультации о типе применения необходимо обратиться в службу технической поддержки компании «Bonfiglioli»

www.reduktornek.ru

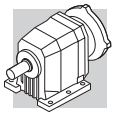

C 22...HS

P

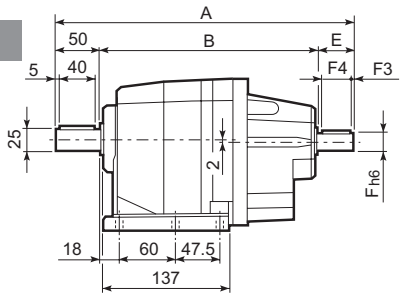

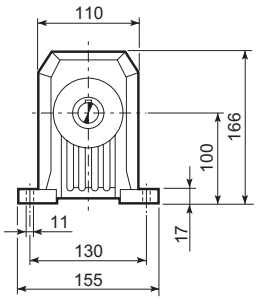

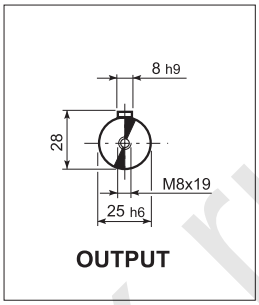

F

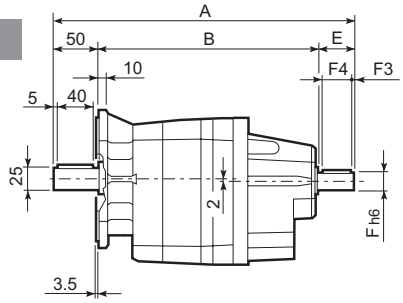

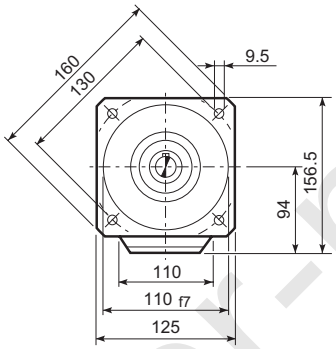

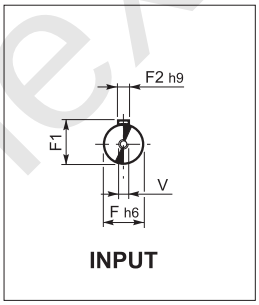

U

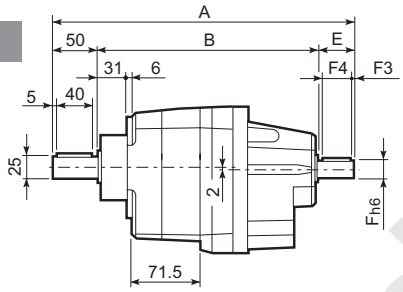

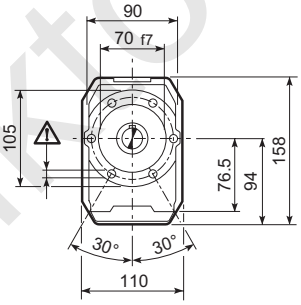

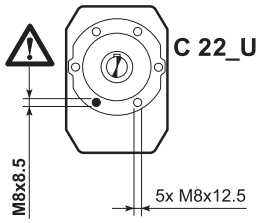

UF

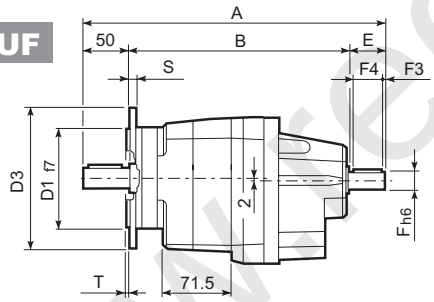

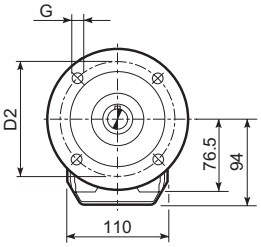

C 22_U						
	D1	D2	D3	G	T	S
FA	95	115	140	9	3	10
FB	110	130	160	9	3	10
FC	130	165	200	11	3.5	11

		A	B	E	F	F1	F2	F3	F4	V	Kg
C 22 2	HS	323	233	40	19	21.5	6	2.5	35	M6x16	7.2
C 22 3		335.5	245.5	40	16	18	6	2.5	36	M6x16	7.5

www.redukt0r-mex.ru

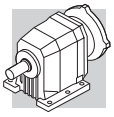

C 32...M

P

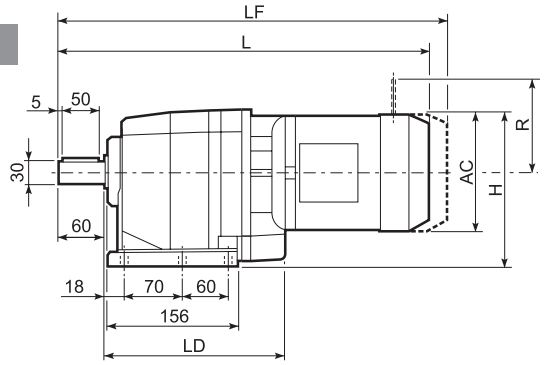

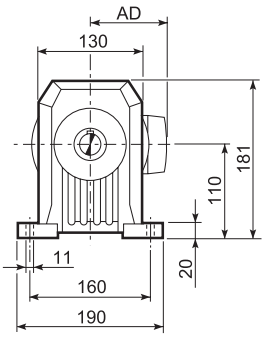

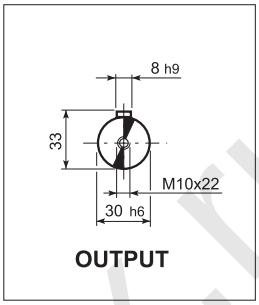

F

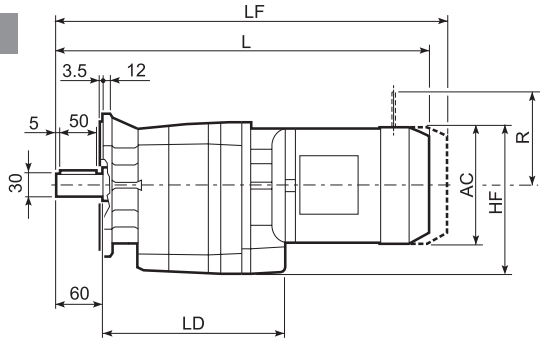

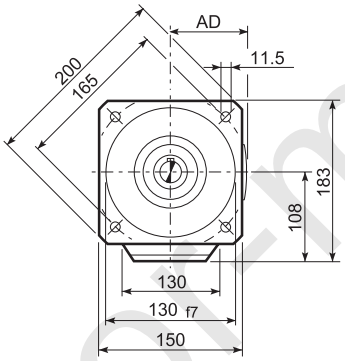

U

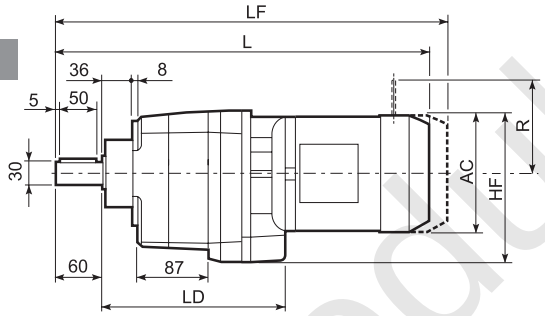

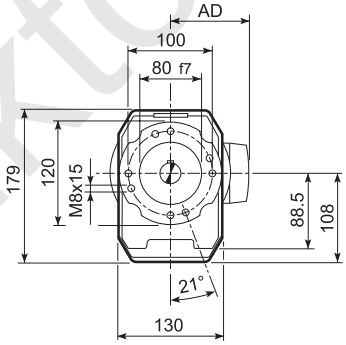

UF

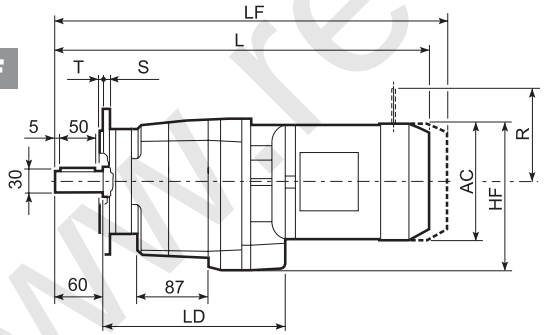

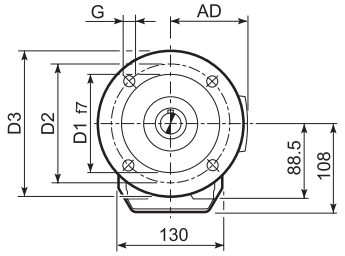

C 32_U	D1	D2	D3	G	T	S
FA	110	130	160	9	3	10
FB	130	165	200	11	3.5	11
FC	180	215	250	14	4	13

										M...FD M...FA		M...FD		M...FA	
			AC	H	HF	L	LD	AD	Kg	LF	Kg	R	AD	R	AD
C 32 2	S1	M1	138	179	177	462.5	205.5	108	14	523.5	16	103	135	124	108
C 32 2	S2	M2S	156	188	186	490.5	217.5	119	18	561.5	21	129	146	134	119
C 32 2	S3	M3S	195	207.5	205.5	534.5	227.5	142	23	630.5	28	160	158	160	142
C 32 2	S3	M3L	195	207.5	205.5	566.5	227.5	142	32	657.5	37	160	158	160	142
C 32 2	S4	M4	258	239	237	674.5	—	193	66	738.5	82	226	210	217	193
C 32 2	S4	M4LC	258	239	237	709.5	—	193	74	763.5	90	226	210	217	193
C 32 3	S05	M05	121	170.5	168.5	491	—	95	13	557	15	96	122	116	95
C 32 3	S1	M1	138	179	177	520	—	108	15	581	17	103	135	124	108
C 32 3	S2	M2S	156	188	186	548	—	119	18	619	21	129	146	134	119
C 32 3	S3	M3S	195	207.5	205.5	592	—	142	24	688	29	160	158	160	142
C 32 3	S3	M3L	195	207.5	205.5	624	—	142	33	715	38	160	158	160	142

www.redukto-mex.ru

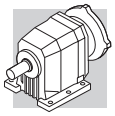

C 32...P(IEC)

P

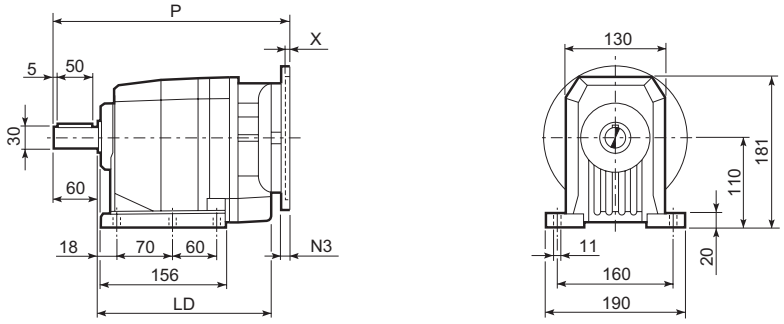

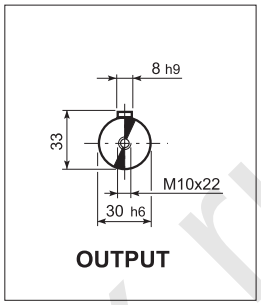

F

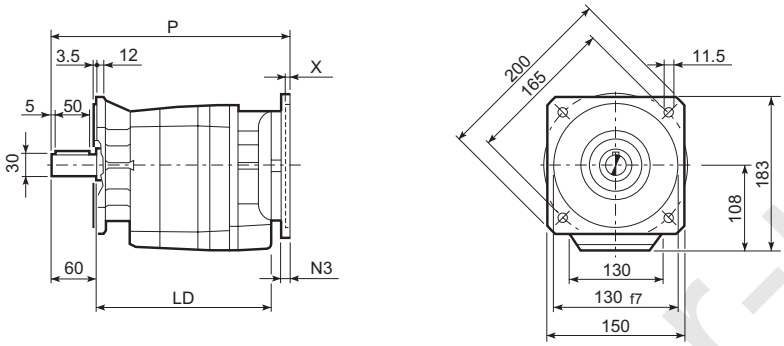

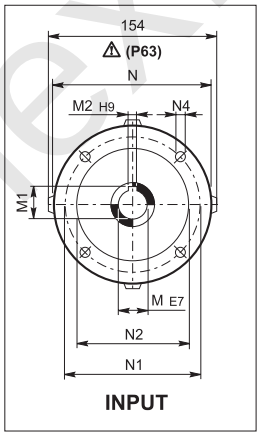

U

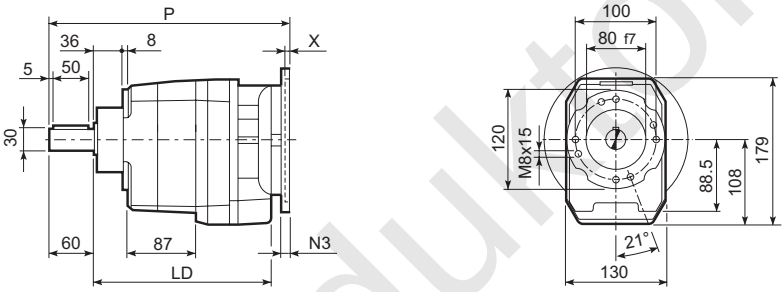

UF

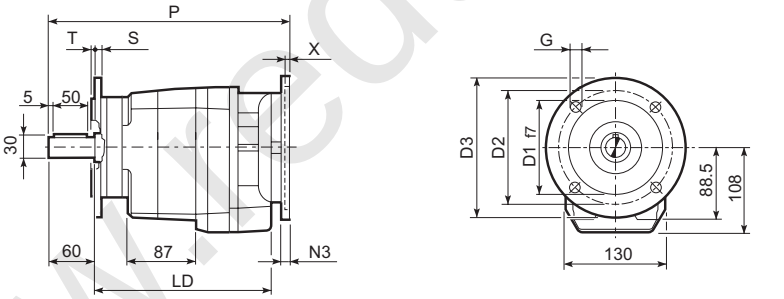

C 32_U	D1	D2	D3	G	T	S
FA	110	130	160	9	3	10
FB	130	165	200	11	3.5	11
FC	180	215	250	14	4	13

		LD	M	M1	M2	N	N1	N2	N3	N4	X	P	Kg
C 32 2	**P63**	217.5	11	12.8	4	140	115	95	—	M8x19	4	307.5	9
C 32 2	**P71**	217.5	14	16.3	5	160	130	110	—	M8x16	4.5	307.5	9
C 32 2	**P80**	227.5	19	21.8	6	200	165	130	—	M10x12	4	327	10
C 32 2	**P90**	227.5	24	27.3	8	200	165	130	—	M10x12	4	327	10
C 32 2	**P100**	227.5	28	31.3	8	250	215	180	—	M12x16	4.5	337	14
C 32 2	**P112**	227.5	28	31.3	8	250	215	180	—	M12x16	4.5	337	14
C 32 2	**P132**	—	38	41.3	10	300	265	230	16	14	5	373	17
C 32 3	**P63**	—	11	12.8	4	140	115	95	—	M8x19	4	365	10
C 32 3	**P71**	—	14	16.3	5	160	130	110	—	M8x16	4.5	365	10
C 32 3	**P80**	—	19	21.8	6	200	165	130	—	M10x12	4	384.5	11
C 32 3	**P90**	—	24	27.3	8	200	165	130	—	M10x12	4	384.5	11
C 32 3	**P100**	—	28	31.3	8	250	215	180	—	M12x16	4.5	394.5	15
C 32 3	**P112**	—	28	31.3	8	250	215	180	—	M12x16	4.5	394.5	15

www.redukt0r-mex.ru

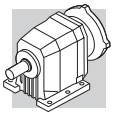

C 32...SK / SC

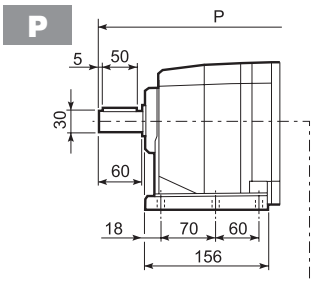

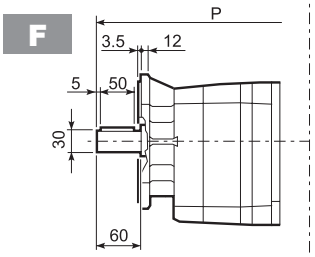

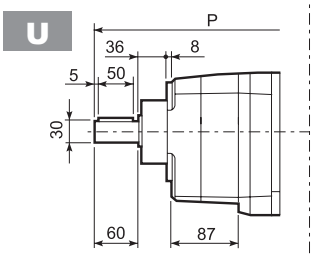

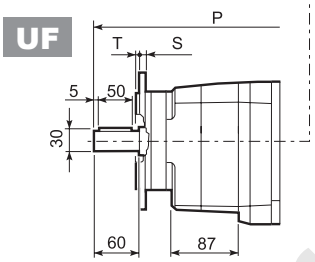

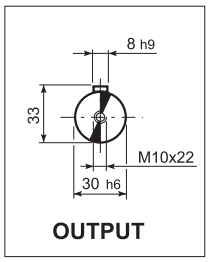

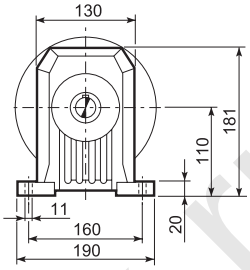

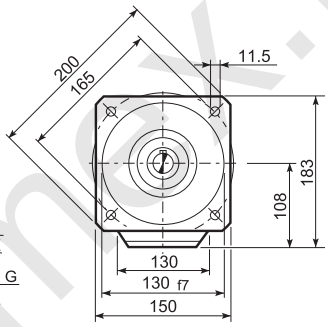

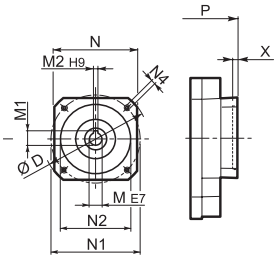

SK...

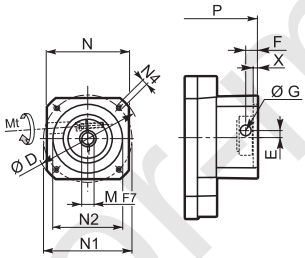

SC...

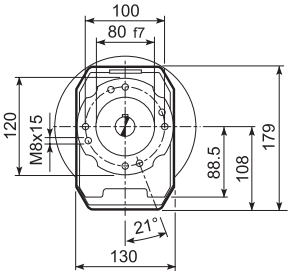

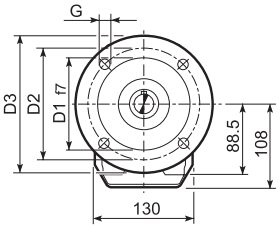

C 32_U	D1	D2	D3	G	T	S
FA	110	130	160	9	3	10
FB	130	165	200	11	3.5	11
FC	180	215	250	14	4	13

		D	M	M1	M2	N	N1	N2	N4	X	P 2x	P 3x	Kg
C 32 2/3	SK60A	102	11	12.8	4	82	75	60	M5x10	3.5	279	336.5	8/9
C 32 2/3	SK60B	102	14	16.3	5	82	75	60	M5x10	4	286	343.5	9/10
C 32 2/3	SK80A	115	14	16.3	5	90	100	80	M6x12	4	286	343.5	9/10
C 32 2/3	SK80C	120	19	21.8	6	96	100	80	M6x12	4	327	384.5	10/11
C 32 2/3	SK95A	130	14	16.3	5	102	115	95	M8x12	4	327	384.5	10/11
C 32 2/3	SK95B	130	19	21.8	6	102	115	95	M8x12	4	327	384.5	10/11
C 32 2/3	SK95C	130	24	27.3	8	102	115	95	M8x12	4	327	384.5	10/11
C 32 2/3	SK110A	150	19	21.8	6	120	130	110	M8x12	5	327	384.5	10/11
C 32 2/3	SK110B	150	24	27.3	8	120	130	110	M8x12	5	327	384.5	10/11
C 32 2	SK130A	188	24	27.3	8	142	165	130	M10x20	5	327	—	11

			Mt	D	E	F	G	M	N	N1	N2	N4	X	P 2x	P 3x	Kg
C 32 2/3	SC60A	M6	15 Nm	102	7	12.5	12.5	11	82	75	60	M5x10	4	306	363.5	9/10
C 32 2/3	SC60B	M6	15 Nm	102	7	12.5	12.5	14	82	75	60	M5x10	4	306	363.5	10/11
C 32 2/3	SC80A	M6	15 Nm	115	6	12.5	12.5	14	90	100	80	M6x12	4	306	363.5	10/11
C 32 2/3	SC80C	M6	15 Nm	120	15.5	14.5	17.75	19	96	100	80	M6x12	4	350.5	408	11/12
C 32 2/3	SC95A	M6	15 Nm	130	16.5	15	17.75	14	102	115	95	M8x16	4	350.5	408	11/12
C 32 2/3	SC95B	M6	15 Nm	130	16.5	15	17.75	19	102	115	95	M8x16	4	350.5	408	11/12
C 32 2/3	SC95C	M6	15 Nm	130	16.5	15	17.75	24	102	115	95	M8x16	4	350.5	408	11/12
C 32 2/3	SC 110A	M6	15 Nm	150	16.5	16	17.75	19	120	130	110	M8x16	5	350.5	408	12/13
C 32 2/3	SC 110B	M6	15 Nm	150	16.5	16	17.75	24	120	130	110	M8x16	5	350.5	408	12/13
C 32 2	SC 130A	M6	15 Nm	188	19	16	17.75	24	142	165	130	M10x20	5	350.5	—	13

www.reduktor-mex.ru

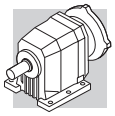

C 32...HS

P

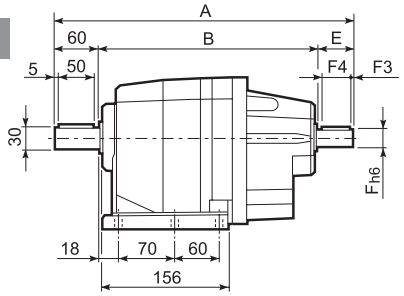

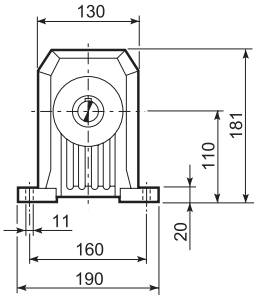

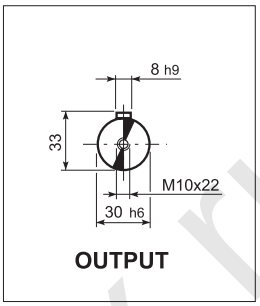

F

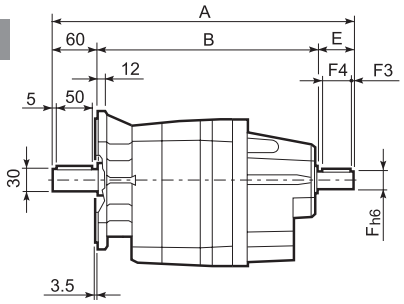

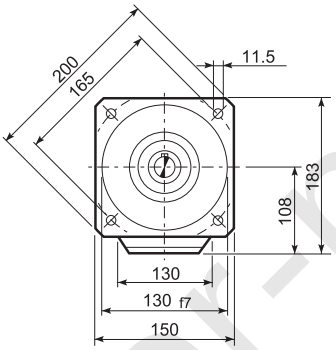

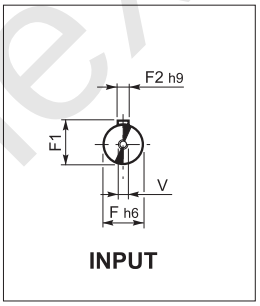

U

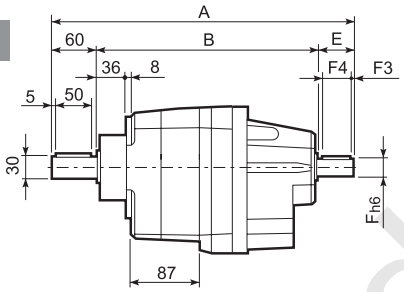

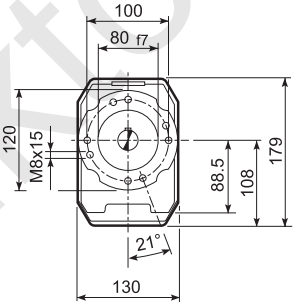

UF

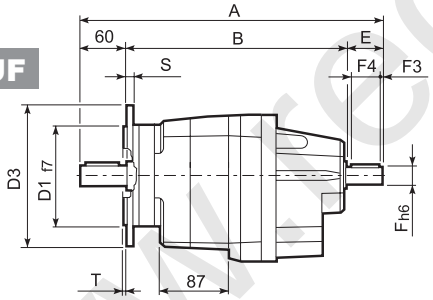

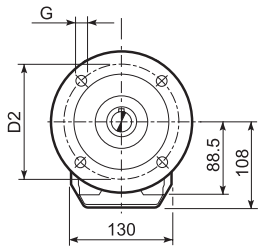

C 32_U						
	D1	D2	D3	G	T	S
FA	110	130	160	9	3	10
FB	130	165	200	11	3.5	11
FC	180	215	250	14	4	13

		A	B	E	F	F1	F2	F3	F4	V	Kg
C 32 2	HS	357.5	257.5	40	19	21.5	6	2.5	35	M6x16	11.1
C 32 3		372	272	40	16	18	5	2.5	36	M6x16	10.6

www.redukto-imex.ru

P

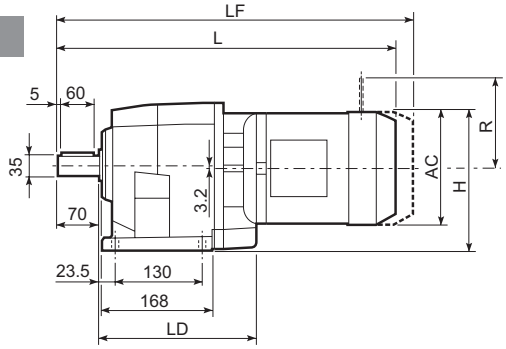

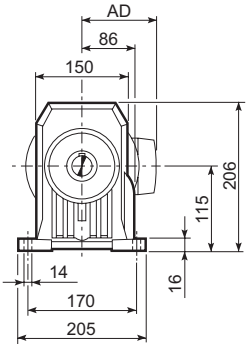

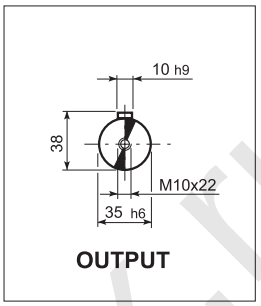

U

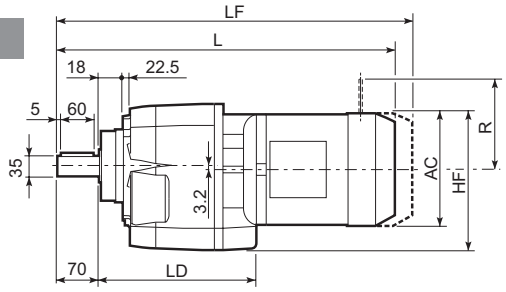

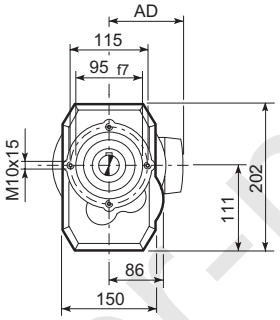

UF

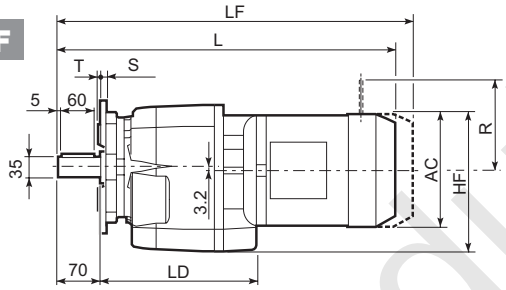

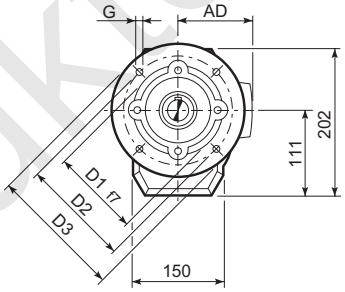

C 36_U						
	D1	D2	D3	G	T	S
FA	130	165	200	11	3.5	11
FB	180	215	250	14	4	14

										M...FD M...FA		M...FD		M...FA	
			AC	H	HF	L	LD	AD	Kg	LF	Kg	R	AD	R	AD
C 36 2/3	**S1**	**M1**	138	184	177	481	214	108	20	542	21	103	135	124	108
C 36 2/3	**S2**	**M2S**	156	193	186	509	226	119	23	580	27	129	146	134	119
C 36 2/3	**S3**	**M3S**	195	212.5	205.5	553	236	142	28	649	33	160	158	160	142
C 36 2/3	**S3**	**M3L**	195	212.5	205.5	585	236	142	37	676	42	160	158	160	142
C 36 2/3	**S4**	**M4**	258	244	240	693.5	—	193	71	802.5	87	226	210	217	193
C 36 2/3	**S4**	**M4LC**	258	244	240	728.5	—	193	79	827.5	95	226	210	217	193
C 36 4	**S05**	**M05**	121	175.5	168.5	509.5	—	95	19	575.5	20	96	122	116	95
C 36 4	**S1**	**M1**	138	184	177	538.5	—	108	21	599.5	22	103	135	124	108
C 36 4	**S2**	**M2S**	156	193	186	566.5	—	119	24	637.5	28	129	146	134	119
C 36 4	**S3**	**M3S**	195	212.5	205.5	610.5	—	142	29	706.5	34	160	158	160	142
C 36 4	**S3**	**M3L**	195	212.5	205.5	642.5	—	142	38	733.5	43	160	158	160	142

www.redukto-mex.ru

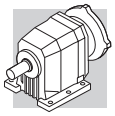

C 36...P(IEC)

P

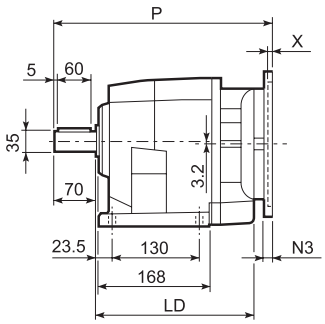

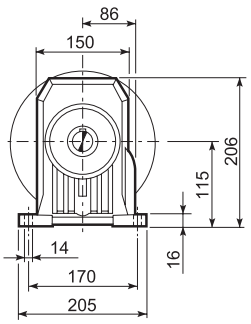

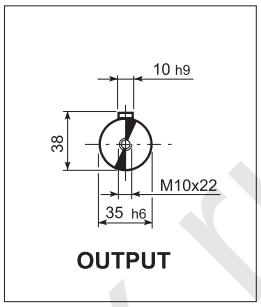

U

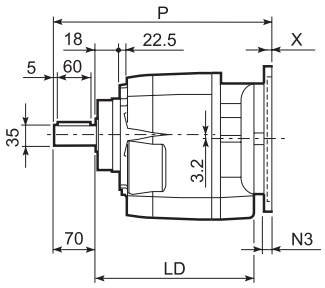

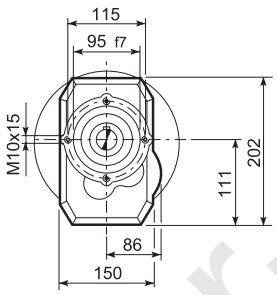

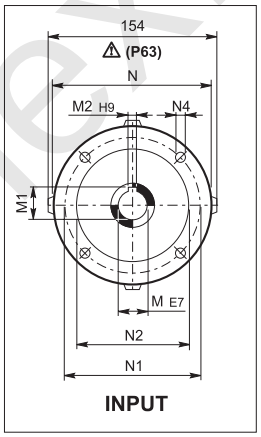

UF

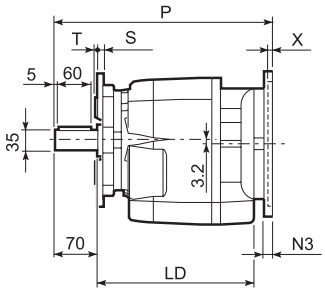

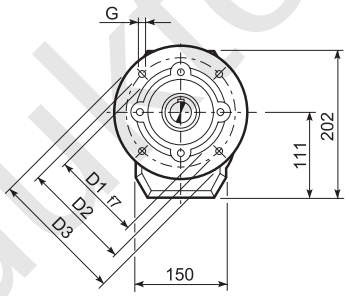

C 36_U						
	D1	D2	D3	G	T	S
FA	130	165	200	11	3.5	11
FB	180	215	250	14	4	14

		LD	M	M1	M2	N	N1	N2	N3	N4	X	P	Kg
C 36 2/3	P63	226	11	12.8	4	140	115	95	—	M8x19	4	326	17
C 36 2/3	P71	226	14	16.3	5	160	130	110	—	M8x16	4.5	326	17
C 36 2/3	P80	236	19	21.8	6	200	165	130	—	M10x12	4	345.5	18
C 36 2/3	P90	236	24	27.3	8	200	165	130	—	M10x12	4	345.5	18
C 36 2/3	P100	236	28	31.3	8	250	215	180	—	M12x16	4.5	355.5	22
C 36 2/3	P112	236	28	31.3	8	250	215	180	—	M12x16	4.5	355.5	22
C 36 2/3	P132	—	38	41.3	10	300	265	230	16	14	5	392.5	25
C 36 4	P63	—	11	12.8	4	140	115	95	—	M8x19	4	383.5	20
C 36 4	P71	—	14	16.3	5	160	130	110	—	M8x16	4.5	383.5	20
C 36 4	P80	—	19	21.8	6	200	165	130	—	M10x12	4	403	21
C 36 4	P90	—	24	27.3	8	200	165	130	—	M10x12	4	403	21
C 36 4	P100	—	28	31.3	8	250	215	180	—	M12x16	4.5	413	25
C 36 4	P112	—	28	31.3	8	250	215	180	—	M12x16	4.5	413	25

www.redukt0r-mex.ru

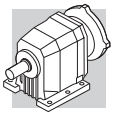

C 36...SK / SC

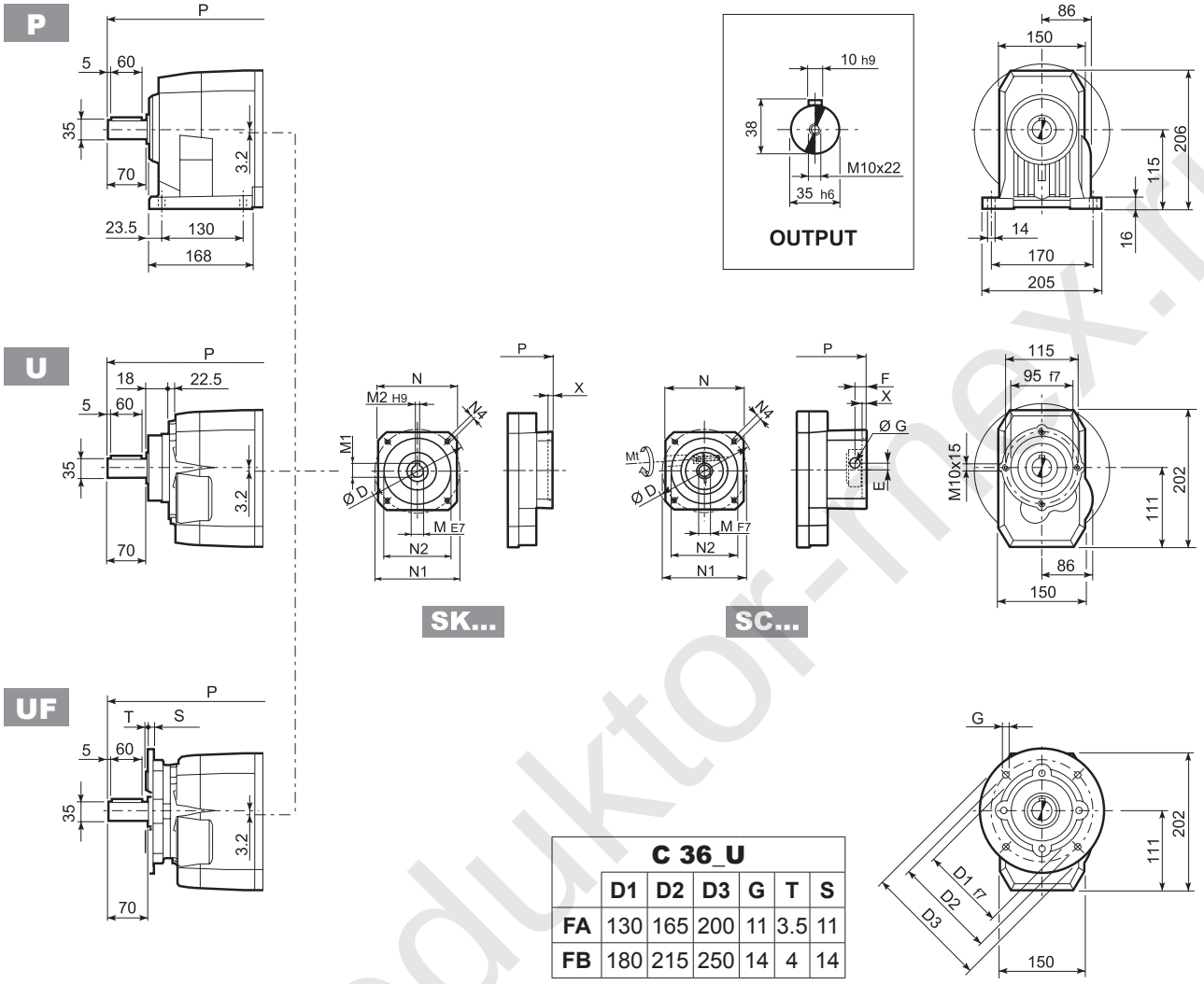

C 36_U						
	D1	D2	D3	G	T	S
FA	130	165	200	11	3.5	11
FB	180	215	250	14	4	14

		D	M	M1	M2	N	N1	N2	N4	X	P 2/3x	P 4x	Kg
C 36 2/3/4	SK60A	102	11	12.8	4	82	75	60	M5x10	3.5	297.5	355	16/16/19
C 36 2/3/4	SK60B	102	14	16.3	5	82	75	60	M5x10	4	304.5	362	17/17/20
C 36 2/3/4	SK80A	115	14	16.3	5	90	100	80	M6x12	4	304.5	362	18/18/21
C 36 2/3/4	SK80C	120	19	21.8	6	96	100	80	M6x12	4	304.5	403	18/18/21
C 36 2/3/4	SK95A	130	14	16.3	5	102	115	95	M8x12	4	345.5	403	18/18/21
C 36 2/3/4	SK95B	130	19	21.8	6	102	115	95	M8x12	4	345.5	403	18/18/21
C 36 2/3/4	SK95C	130	24	27.3	8	102	115	95	M8x12	4	345.5	403	18/18/21
C 36 2/3/4	SK110A	150	19	21.8	6	120	130	110	M8x12	5	345.5	403	18/18/21
C 36 2/3/4	SK110B	150	24	27.3	8	120	130	110	M8x12	5	345.5	403	18/18/21
C 36 2/3	SK130A	188	24	27.3	8	142	165	130	M10x20	5	345.5	—	19/19

			Mt	D	E	F	G	M	N	N1	N2	N4	X	P 2/3x	P 4x	Kg
C 36 2/3/4	SC60A	M6	15 Nm	102	7	12.5	12.5	11	82	75	60	M5x10	4	324.5	382	17/17/20
C 36 2/3/4	SC60B	M6	15 Nm	102	7	12.5	12.5	14	82	75	60	M5x10	4	324.5	382	18/18/21
C 36 2/3/4	SC80A	M6	15 Nm	115	6	12.5	12.5	14	90	100	80	M6x12	4	324.5	426.5	18/18/21
C 36 2/3/4	SC80C	M6	15 Nm	120	15.5	14.5	17.75	19	96	100	80	M6x12	4	369	426.5	19/19/22
C 36 2/3/4	SC95A	M6	15 Nm	130	16.5	15	17.75	14	102	115	95	M8x16	4	369	426.5	19/19/22
C 36 2/3/4	SC95B	M6	15 Nm	130	16.5	15	17.75	19	102	115	95	M8x16	4	369	426.5	19/19/22
C 36 2/3/4	SC95C	M6	15 Nm	130	16.5	15	17.75	24	102	115	95	M8x16	4	369	426.5	19/19/22
C 36 2/3/4	SC110A	M6	15 Nm	150	16.5	16	17.75	19	120	130	110	M8x16	5	369	426.5	21/21/24
C 36 2/3/4	SC110B	M6	15 Nm	150	16.5	16	17.75	24	120	130	110	M8x16	5	369	426.5	21/21/24
C 36 2/3	SC130A	M6	15 Nm	188	19	16	17.75	24	142	165	130	M10x20	5	369	—	22/22

www.reduktor-inex.ru

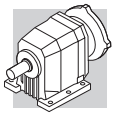

C 36...HS

P

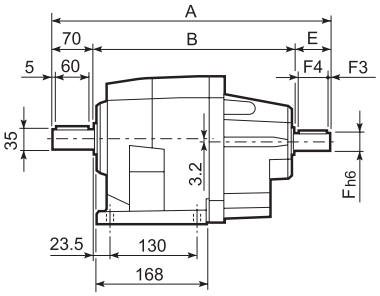

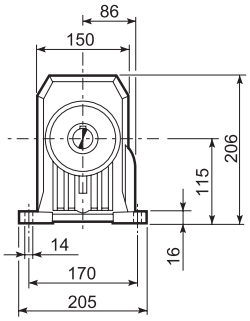

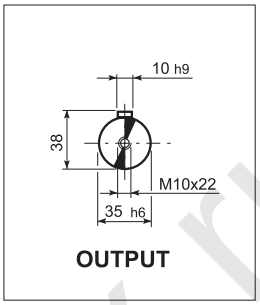

U

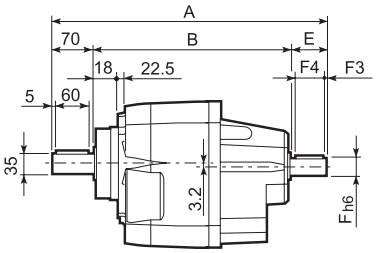

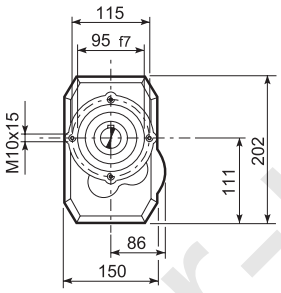

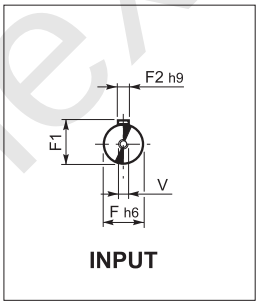

UF

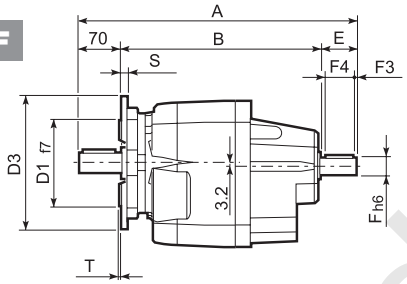

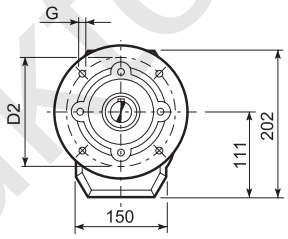

C 36_U						
	D1	D2	D3	G	T	S
FA	130	165	200	11	3.5	11
FB	180	215	250	14	4	14

		A	B	E	F	F1	F2	F3	F4	V	Kg
C 36 2	HS	415.5	295.5	50	24	27	8	2.5	45	M8x19	25.5
C 36 3		415.5	295.5	50	24	27	8	2.5	45	M8x19	25.5
C 36 4		390.5	280.5	40	16	18	5	2.5	36	M6x16	26.5

www.redukt0r-mex.ru

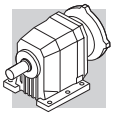

C 41...M

P

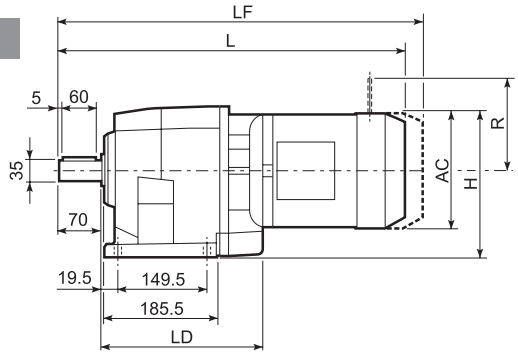

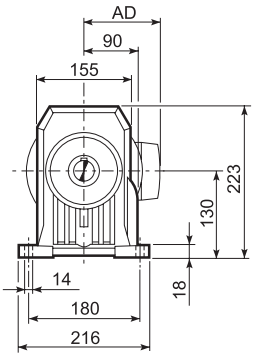

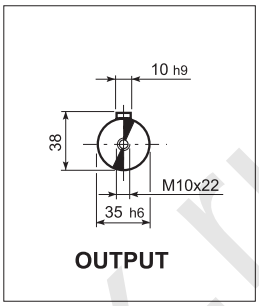

U

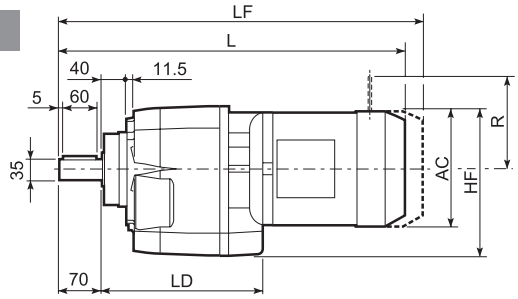

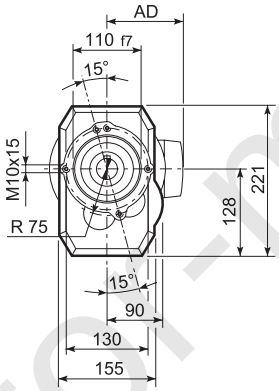

UF

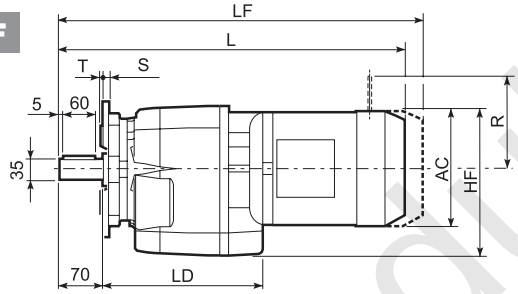

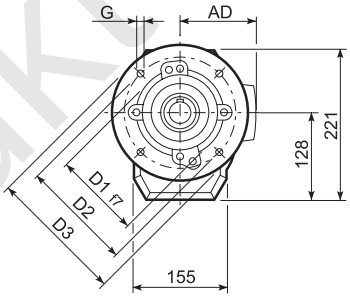

C 41_U						
	D1	D2	D3	G	T	S
FA	130	165	200	11	3.5	11
FB	180	215	250	14	4	13

									M...FD M...FA		M...FD		M...FA	
			AC	H	HF	L	LD	AD	Kg	LF	Kg	R	AD	R	AD
C 41 2/3	**S1**	**M1**	138	199	197	491.5	220	108	25	552.5	28	103	135	124	108
C 41 2/3	**S2**	**M2S**	156	208	206	519.5	235.5	119	31	590.5	34	129	146	134	119
C 41 2/3	**S3**	**M3S**	195	227.5	225.5	563.5	251.5	142	36	659.5	41	160	158	160	142
C 41 2/3	**S3**	**M3L**	195	227.5	225.5	595.5	251.5	142	45	686.5	50	160	158	160	142
C 41 2/3	**S4**	**M4**	258	259	257	703.5	—	193	71	812.5	83	226	210	217	193
C 41 2/3	**S4**	**M4LC**	258	259	257	739	—	193	78	838	91	226	210	217	193
C 41 4	**S05**	**M05**	231	245.5	243.5	524	—	95	27	590	28	96	122	116	95
C 41 4	**S1**	**M1**	138	199	197	553	—	108	28	614	31	103	135	124	108
C 41 4	**S2**	**M2S**	156	208	206	581	—	119	34	652	37	129	146	134	119
C 41 4	**S3**	**M3S**	195	227.5	225.5	625	—	142	39	721	44	160	158	160	142
C 41 4	**S3**	**M3L**	195	227.5	225.5	657	—	142	48	748	53	160	158	160	142

www.redukto-mex.ru

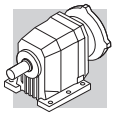

C 41...P(IEC)

P

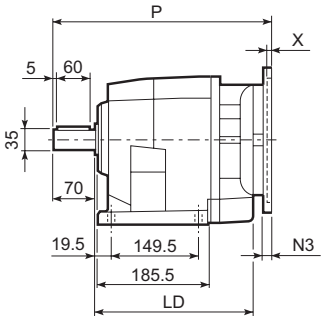

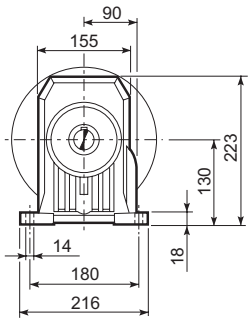

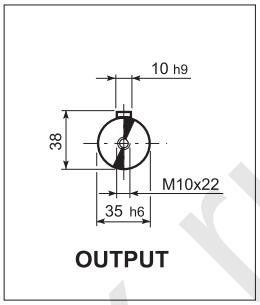

U

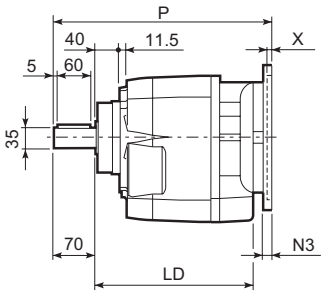

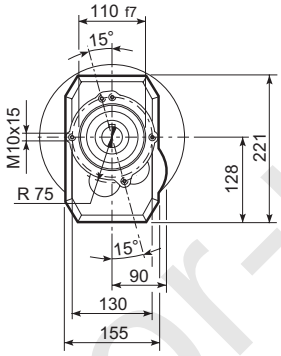

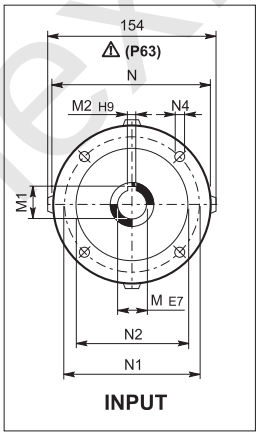

UF

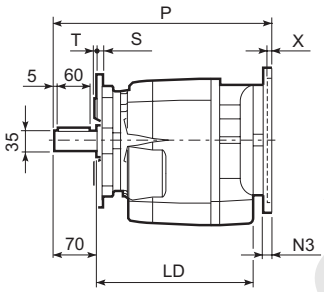

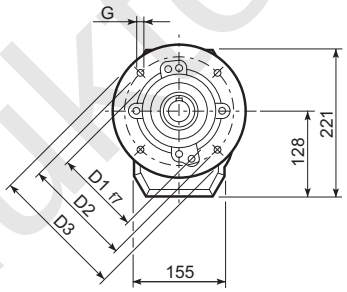

C 41_U						
	D1	D2	D3	G	T	S
FA	130	165	200	11	3.5	11
FB	180	215	250	14	4	13

		LD	M	M1	M2	N	N1	N2	N3	N4	X	P	Kg
C 41 2/3	**P63**	235.5	11	12.8	4	140	115	95	—	M8x19	4	336.5	27
C 41 2/3	**P71**	235.5	14	16.3	5	160	130	110	—	M8x16	4.5	336.5	28
C 41 2/3	**P80**	251.5	19	21.8	6	200	165	130	—	M10x12	4	356	29
C 41 2/3	**P90**	251.5	24	27.3	8	200	165	130	—	M10x12	4	356	29
C 41 2/3	**P100**	—	28	31.3	8	250	215	180	—	M12x16	4.5	366	33
C 41 2/3	**P112**	—	28	31.3	8	250	215	180	—	M12x16	4.5	366	33
C 41 2/3	**P132**	—	38	41.3	10	300	265	230	16	14	5	402.5	35
C 41 4	**P63**	—	11	12.8	4	140	115	95	—	M8x19	4	395	30
C 41 4	**P71**	—	14	16.3	5	160	130	110	—	M8x16	4.5	395	31
C 41 4	**P80**	—	19	21.8	6	200	165	130	—	M10x12	4	414.5	32
C 41 4	**P90**	—	24	27.3	8	200	165	130	—	M10x12	4	414.5	32
C 41 4	**P100**	—	28	31.3	8	250	215	180	—	M12x16	4.5	424.5	36
C 41 4	**P112**	—	28	31.3	8	250	215	180	—	M12x16	4.5	424.5	36

www.reduktor-mex.ru

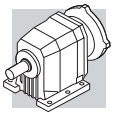

C 41...SK / SC

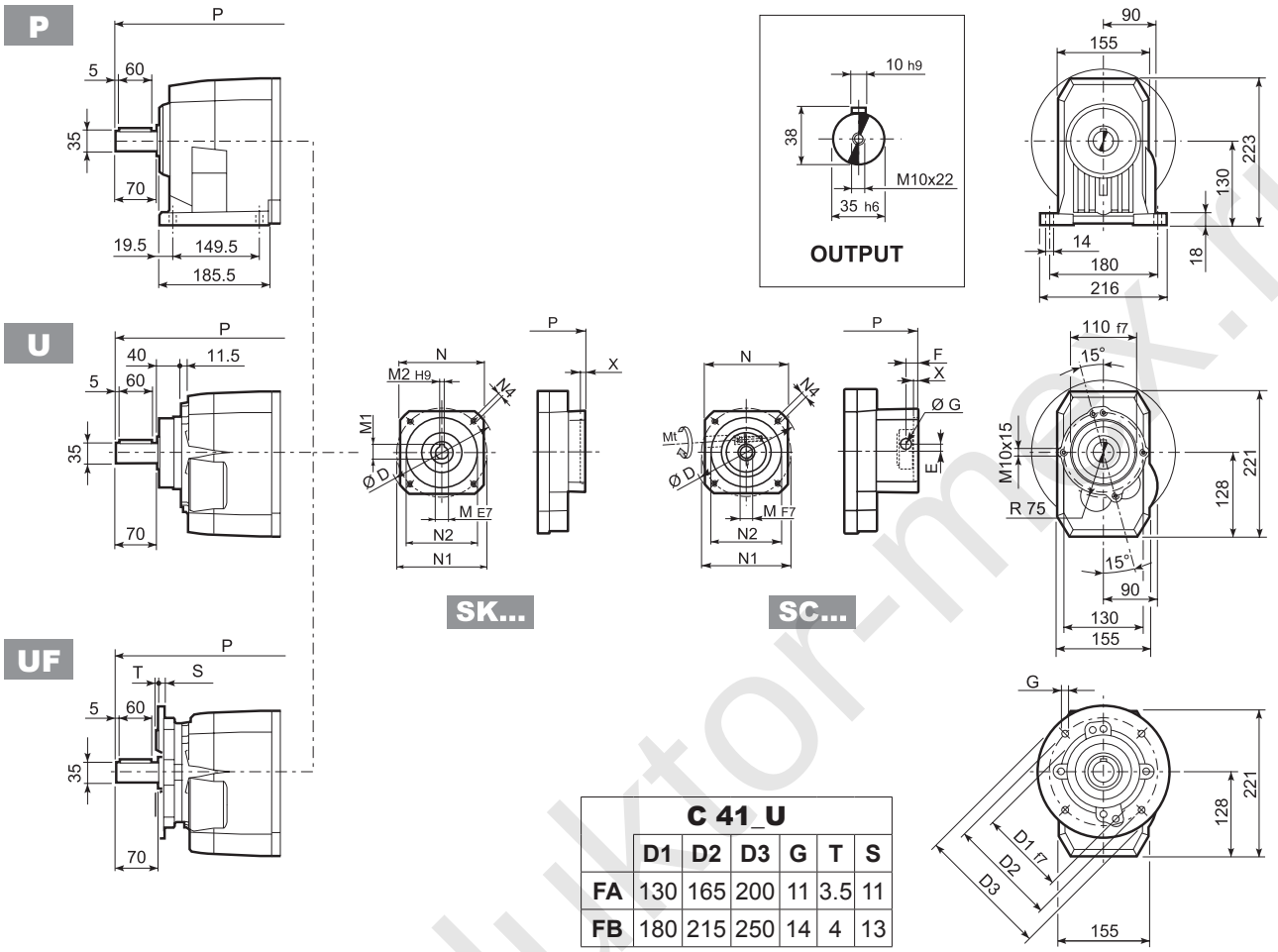

C 41_U	D1	D2	D3	G	T	S
FA	130	165	200	11	3.5	11
FB	180	215	250	14	4	13

		D	M	M1	M2	N	N1	N2	N4	X	P 2/3x	P 4x	Kg
C41 4	SK60A	102	11	12.8	4	82	75	60	M5x10	3.5	—	370	31
C41 4	SK60B	102	14	16.3	5	82	75	60	M5x10	4	—	377	32
C41 4	SK80A	115	14	16.3	5	90	100	80	M6x12	4	—	377	32
C41 2/3	SK80B	120	14	16.3	5	96	100	80	M6x12	4	356.5	—	29/29
C41 2/3/4	SK80C	120	19	21.8	6	96	100	80	M6x12	4	356.5	418	29/29/32
C41 2/3/4	SK95A	130	14	16.3	5	102	115	95	M8x12	4	356.5	418	29/29/32
C41 2/3/4	SK95B	130	19	21.8	6	102	115	95	M8x12	4	356.5	418	29/29/33
C41 2/3/4	SK95C	130	24	27.3	8	102	115	95	M8x12	4	356.5	418	29/29/36
C41 2/3/4	SK110A	150	19	21.8	6	120	130	110	M8x12	5	356.5	418	29/29/36
C41 2/3/4	SK110B	150	24	27.3	8	120	130	110	M8x12	5	356.5	418	29/29/36
C41 2/3	SK130A	188	24	27.3	8	142	165	130	M10x20	5	356.5	—	31/31
C41 2/3	SK130B	189	32	35.3	10	160	165	130	M10x20	5	403	—	33/33
C41 2/3	SK180A	240	32	35.3	10	192	215	180	M12x19	5	403	—	33/33
C41 2/3	SK180B	240	38	41.3	10	192	215	180	M12x19	5	403	—	38/38

			Mt	D	E	F	G	M	N	N1	N2	N4	X	P 2/3x	P 4x	Kg
C41 4	SC60A	M6	15 Nm	102	7	12.5	12.5	11	82	75	60	M5x10	4	—	397	32
C41 4	SC60B	M6	15 Nm	102	7	12.5	12.5	14	82	75	60	M5x10	4	—	397	33
C41 4	SC80A	M6	15 Nm	115	6	12.5	12.5	14	90	100	80	M6x12	4	—	397	33
C41 2/3	SC80B	M6	15 Nm	120	15.5	14.5	17.75	14	96	100	80	M6x12	4	380	—	30/30
C41 2/3/4	SC80C	M6	15 Nm	120	15.5	14.5	17.75	19	96	100	80	M6x12	4	380	441.5	30/30/33
C41 2/3/4	SC95A	M6	15 Nm	130	16.5	15	17.75	14	102	115	95	M8x16	4	380	441.5	30/30/34
C41 2/3/4	SC95B	M6	15 Nm	130	16.5	15	17.75	19	102	115	95	M8x16	4	380	441.5	30/30/34
C41 2/3/4	SC95C	M6	15 Nm	130	16.5	15	17.75	24	102	115	95	M8x16	4	380	441.5	30/30/35
C41 2/3/4	SC110A	M6	15 Nm	150	16.5	16	17.75	19	120	130	110	M8x16	5	380	441.5	31/31/39
C41 2/3/4	SC110B	M6	15 Nm	150	16.5	16	17.75	24	120	130	110	M8x16	5	380	441.5	31/31/39
C41 2/3	SC130A	M6	15 Nm	188	19	16	17.75	24	142	165	130	M10x20	5	380	—	32/32
C41 2/3	SC130B	M8	36 Nm	189	20	17	17.75	32	160	165	130	M10x20	5	426	—	36/36
C41 2/3	SC180A	M8	36 Nm	240	20	17.5	17.75	32	192	215	180	M12x24	5	430	—	36/36
C41 2/3	SC180B	M8	36 Nm	240	20	17.5	17.75	38	192	215	180	M12x24	5	430	—	35/35

www.reduktor-max.ru

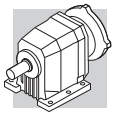

C 41...HS

P

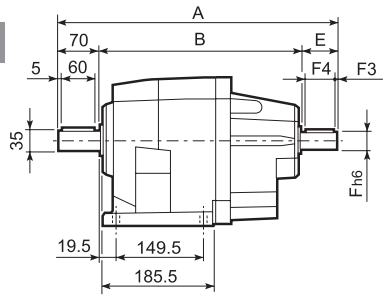

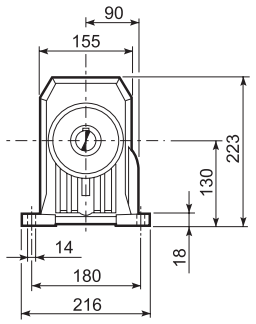

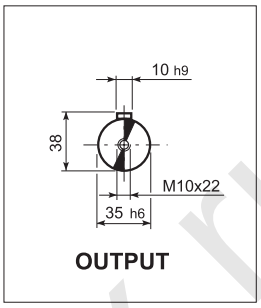

U

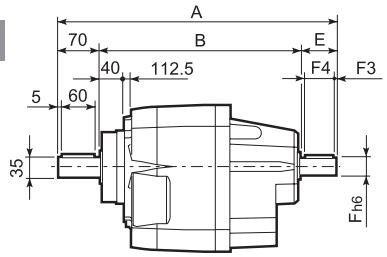

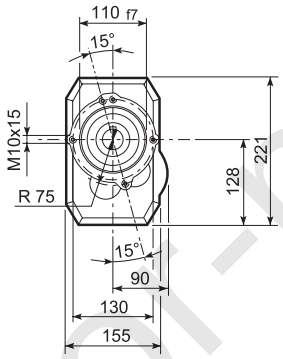

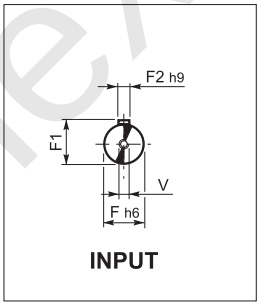

UF

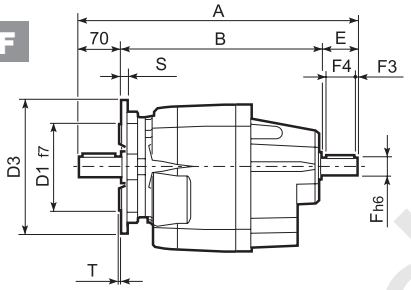

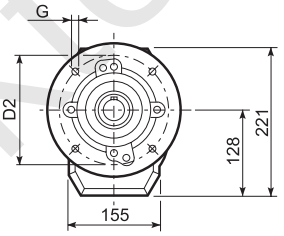

C 41_U						
	D1	D2	D3	G	T	S
FA	130	165	200	11	3.5	11
FB	180	215	250	14	4	13

		A	B	E	F	F1	F2	F3	F4	V	Kg
C 41 2	HS	425.5	305.5	50	24	27	8	2.5	45	M8x19	30
C 41 3		425.5	305.5	50	24	27	8	2.5	45	M8x19	30
C 41 4		448	338	40	19	21.5	6	2.5	35	M6x16	33

www.redukto-r-mex.ru

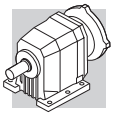

C 51...M

P

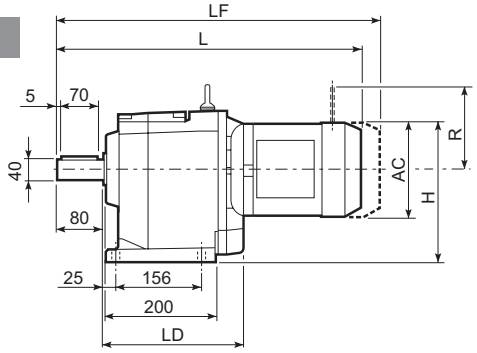

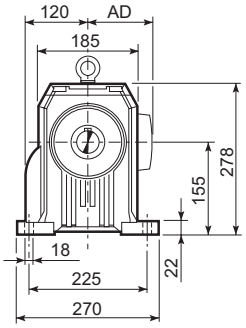

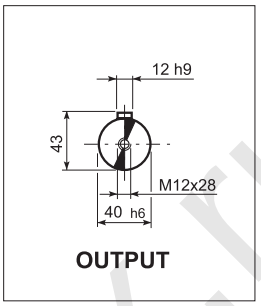

U

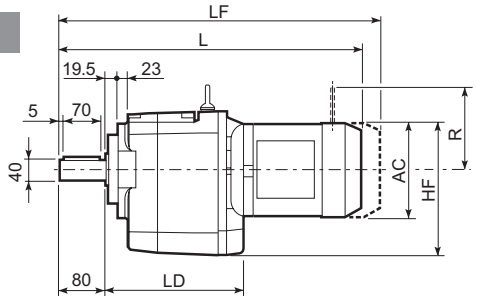

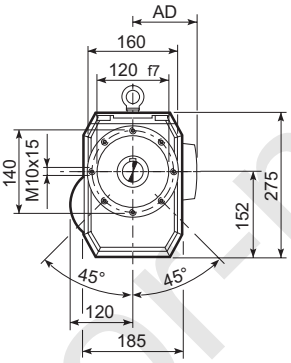

UF

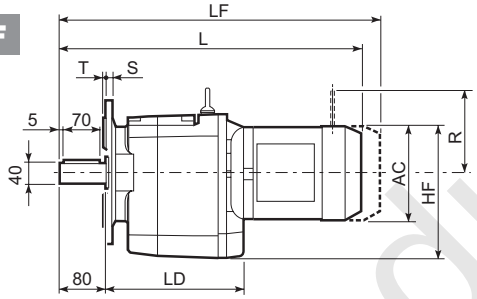

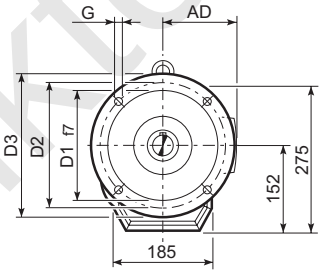

C 51_U						
	D1	D2	D3	G	T	S
FA	180	215	250	14	4	13
FB	230	265	300	14	4	16

										M...FD M...FA		M...FD		M...FA	
			AC	H	HF	L	LD	AD	Kg	LF	Kg	R	AD	R	AD
C 51 2/3	S1	M1	138	224	221	517.5	—	108	49	578.5	52	103	135	124	108
C 51 2/3	S2	M2S	156	233	230	545.5	252.5	119	53	616.5	57	129	146	134	119
C 51 2/3	S3	M3S	195	252.5	249.5	589.5	267.5	142	58	685.5	65	160	158	160	142
C 51 2/3	S3	M3L	195	252.5	249.5	621.5	267.5	142	65	712.5	72	160	158	160	142
C 51 2/3	S4	M4	258	284	281	729.5	—	193	99	838.5	117	226	210	217	193
C 51 2/3	S4	M4LC	258	284	281	764.5	—	193	107	863.5	125	226	210	217	193
C 51 2/3	S5	M5S	310	310	307	816	—	245	127	956	157	266	245	247	245
C 51 2/3	S5	M5L	310	310	307	860	—	245	143	1000	173	266	245	247	245
C 51 4	S1	M1	138	224	221	589	—	108	52	650	55	103	135	124	108
C 51 4	S2	M2S	156	233	230	617	—	119	56	688	60	129	146	134	119
C 51 4	S3	M3S	195	252.5	249.5	661	—	142	61	757	68	160	158	160	142
C 51 4	S3	M3L	195	252.5	249.5	693	—	142	68	784	75	160	158	160	142
C 51 4	S4	M4	258	284	281	801	—	193	98	910	111	226	210	217	193
C 51 4	S4	M4LC	258	284	281	836	—	193	112	935	125	226	210	217	193

www.redukt-mex.ru

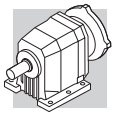

C 51...P(IEC)

P

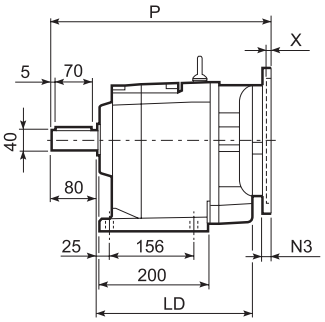

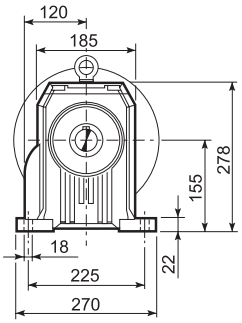

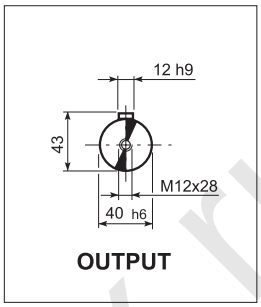

U

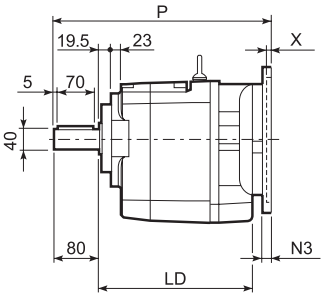

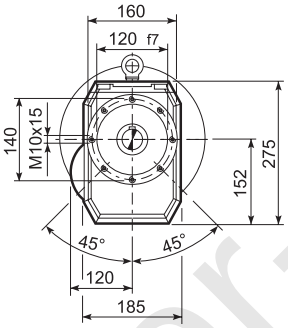

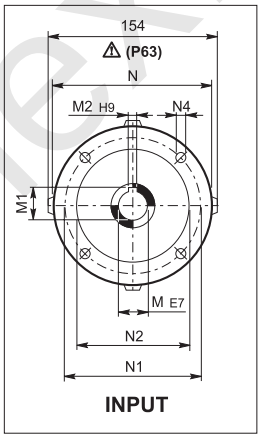

UF

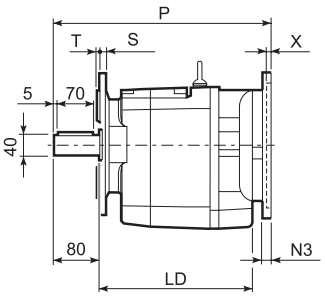

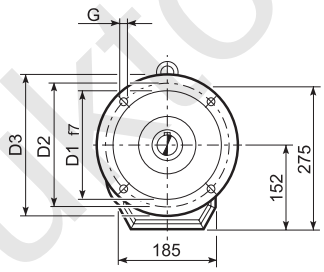

C 51_U						
	D1	D2	D3	G	T	S
FA	180	215	250	14	4	13
FB	230	265	300	14	4	16

		LD	M	M1	M2	N	N1	N2	N3	N4	X	P	Kg
C 51 2/3	**P63**	252.5	11	12.8	4	140	115	95	—	M8x19	4	362.5	45
C 51 2/3	**P71**	252.5	14	16.3	5	160	130	110	—	M8x16	4.5	362.5	45
C 51 2/3	**P80**	267.5	19	21.8	6	200	165	130	—	M10x12	4	382	47
C 51 2/3	**P90**	267.5	24	27.3	8	200	165	130	—	M10x12	4	382	47
C 51 2/3	**P100**	252.5	28	31.3	8	250	215	180	—	M12x16	4.5	392	51
C 51 2/3	**P112**	252.5	28	31.3	8	250	215	180	—	M12x16	4.5	392	51
C 51 2/3	**P132**	252.5	38	41.3	10	300	265	230	16	14	5	428.5	54
C 51 2/3	**P160**	—	42	45.3	12	350	300	250	23	18	5.5	479	58
C 51 2/3	**P180**	—	48	51.8	14	350	300	250	23	18	5.5	479	58
C 51 4	**P63**	—	11	12.8	4	140	115	95	—	M8x19	4	434	47
C 51 4	**P71**	—	14	16.3	5	160	130	110	—	M8x16	4.5	434	47
C 51 4	**P80**	—	19	21.8	6	200	165	130	—	M10x12	4	453.5	49
C 51 4	**P90**	—	24	27.3	8	200	165	130	—	M10x12	4	463.5	49
C 51 4	**P100**	—	28	31.3	8	250	215	180	—	M12x16	4.5	463.5	53
C 51 4	**P112**	—	28	31.3	8	250	215	180	—	M12x16	4.5	463.5	53
C 51 4	**P132**	—	38	41.3	10	300	265	230	16	14	5	500	62

www.redukt0r-mex.ru

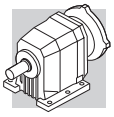

C 51...SK / SC

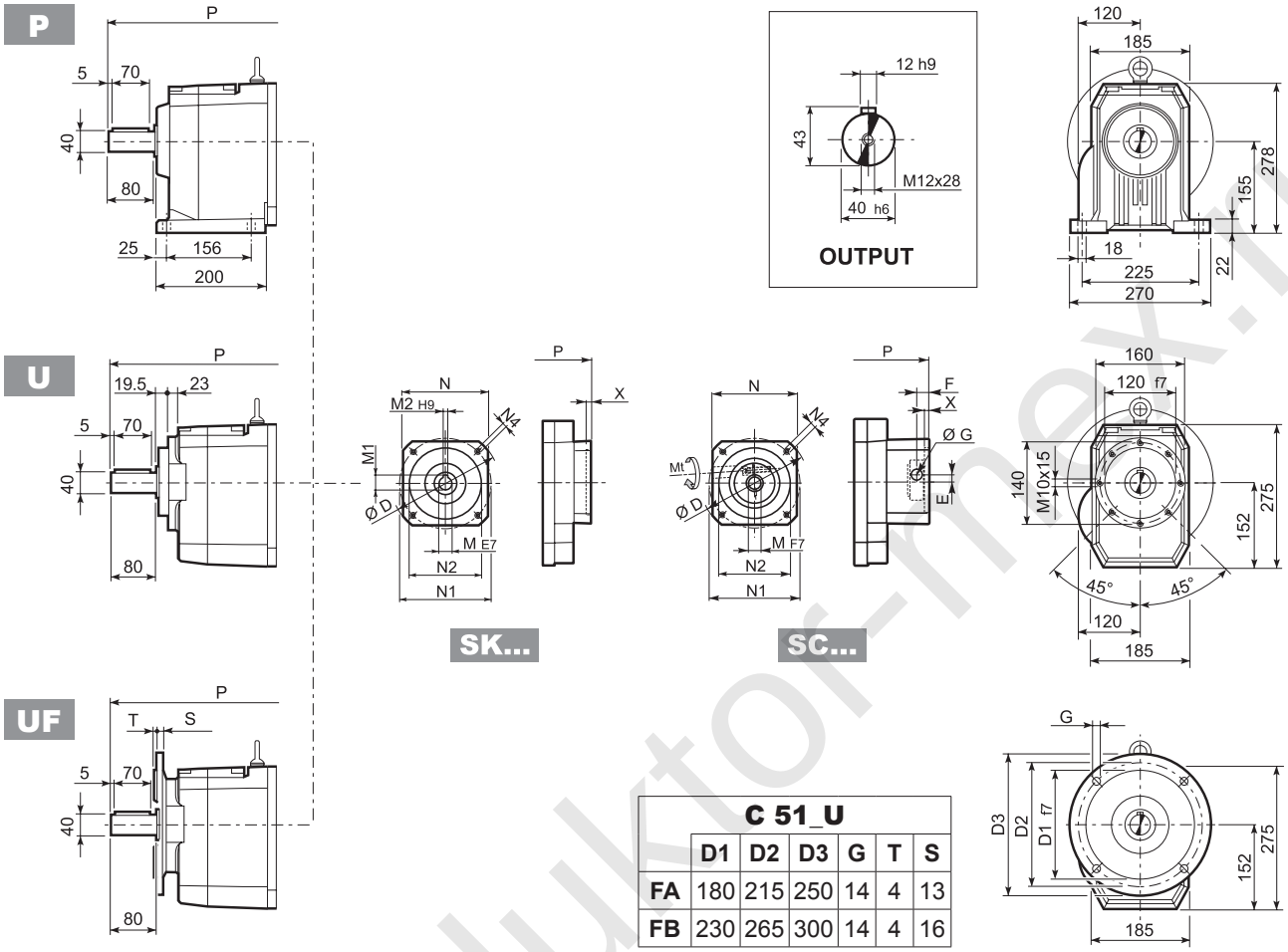

C 51_U						
	D1	D2	D3	G	T	S
FA	180	215	250	14	4	13
FB	230	265	300	14	4	16

		D	M	M1	M2	N	N1	N2	N4	X	P 2/3x	P 4x	Kg
C 51 2/3	SK80B	120	14	16.3	5	96	100	80	M6x12	4	382	—	46/46
C 51 2/3/4	SK80C	120	19	21.8	6	96	100	80	M6x12	4	382	453.5	47/47/49
C 51 2/3/4	SK95A	130	14	16.3	5	102	115	95	M8x12	4	382	453.5	46/46/48
C 51 2/3/4	SK95B	130	19	21.8	6	102	115	95	M8x12	4	382	453.5	47/47/49
C 51 2/3/4	SK95C	130	24	27.3	8	102	115	95	M8x12	4	382	453.5	47/47/49
C 51 2/3/4	SK110A	150	19	21.8	6	120	130	110	M8x12	5	382	453.5	47/47/51
C 51 2/3/4	SK110B	150	24	27.3	8	120	130	110	M8x12	5	382	453.5	47/47/51
C 51 2/3/4	SK130A	188	24	27.3	8	142	165	130	M10x20	5	382	453.5	49/49/52
C 51 2/3	SK130B	189	32	35.3	10	160	165	130	M10x20	5	428.5	—	55/55
C 51 2/3	SK180A	240	32	35.3	10	192	215	180	M12x19	5	428.5	—	55/55
C 51 2/3	SK180B	240	38	41.3	10	192	215	180	M12x19	5	428.5	—	55/55

			Mt	D	E	F	G	M	N	N1	N2	N4	X	P 2/3x	P 4x	Kg
C 51 2/3	SC80B	M6	15 Nm	120	15.5	14.5	17.75	14	96	100	80	M6x12	4	405.5	—	47/47
C 51 2/3/4	SC80C	M6	15 Nm	120	15.5	14.5	17.75	19	96	100	80	M6x12	4	405.5	477	48/48/50
C 51 2/3/4	SC95A	M6	15 Nm	130	16.5	15	17.75	14	102	115	95	M8x16	4	405.5	477	47/47/49
C 51 2/3/4	SC95B	M6	15 Nm	130	16.5	15	17.75	19	102	115	95	M8x16	4	405.5	477	48/48/50
C 51 2/3/4	SC95C	M6	15 Nm	130	16.5	15	17.75	24	102	115	95	M8x16	4	405.5	477	48/48/50
C 51 2/3/4	SC110A	M6	15 Nm	150	16.5	16	17.75	19	120	130	110	M8x16	5	405.5	477	49/49/52
C 51 2/3/4	SC110B	M6	15 Nm	150	16.5	16	17.75	24	120	130	110	M8x16	5	405.5	477	49/49/52
C 51 2/3/4	SC130A	M6	15 Nm	188	19	16	17.75	24	142	165	130	M10x20	5	405.5	477	50/50/53
C 51 2/3	SC130B	M8	36 Nm	189	20	17	17.75	32	160	165	130	M10x20	5	451.5	—	54/54
C 51 2/3	SC180A	M8	36 Nm	240	20	17.5	17.75	32	192	215	180	M12x24	5	455.5	—	54/54
C 51 2/3	SC180B	M8	36 Nm	240	20	17.5	17.75	38	192	215	180	M12x24	5	455.5	—	54/54

www.reduktor-mex.ru

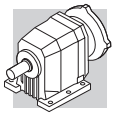

C 51...HS

P

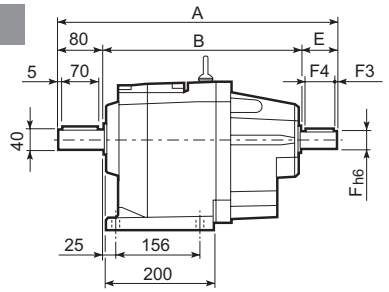

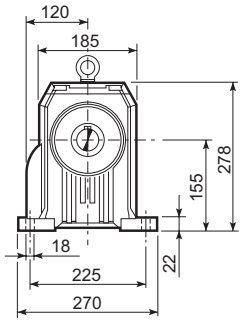

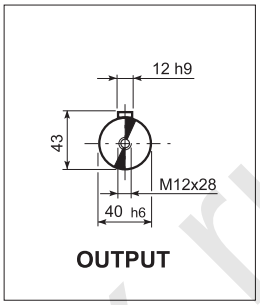

U

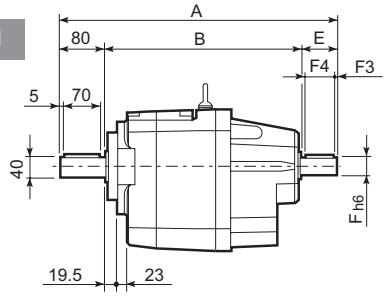

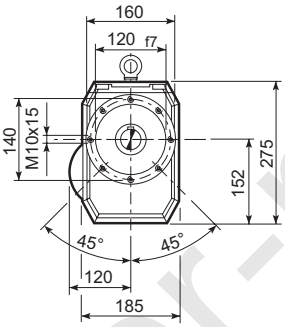

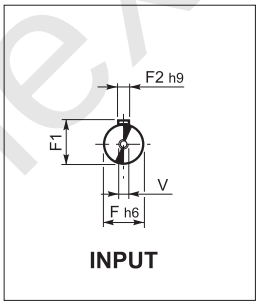

UF

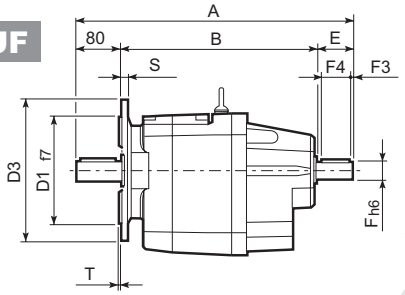

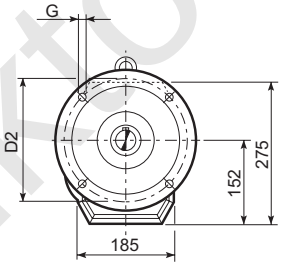

C 51_U						
	D1	D2	D3	G	T	S
FA	180	215	250	14	4	13
FB	230	265	300	14	4	16

		A	B	E	F	F1	F2	F3	F4	V	Kg
C 51 2	HS	451.5	322	50	24	24	8	2.5	45	M8x19	45
C 51 3		451.5	322	50	24	24	8	2.5	45	M8x19	45
C 51 4		484	364	40	19	21.5	6	2.5	35	M6x16	48

www.redukto-mex.ru

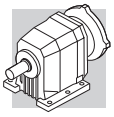

C 61...M

P

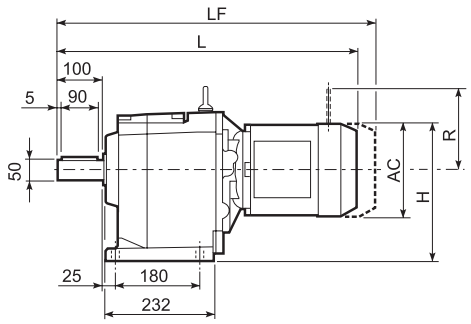

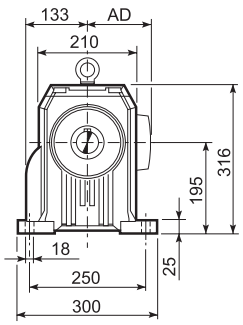

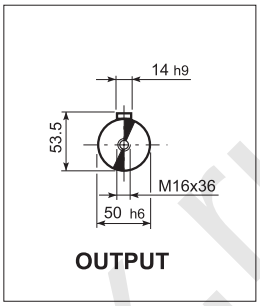

U

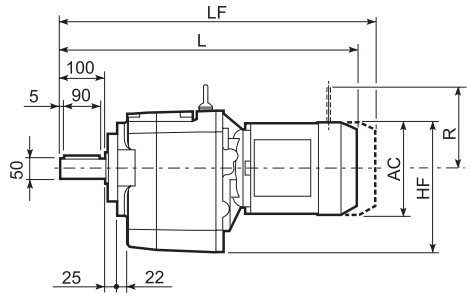

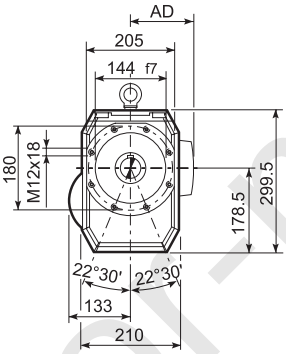

UF

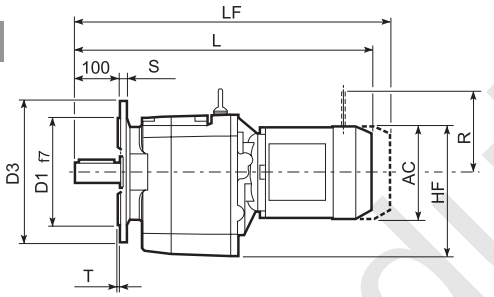

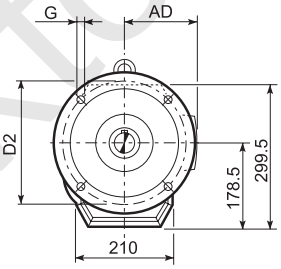

C 61_U						
	D1	D2	D3	G	T	S
FA	230	265	300	14	4	16
FB	250	300	350	18	5	18

C 61									M...FD M...FA		M...FD		M...FA	
			AC	H	HF	L	AD	Kg	LF	Kg	R	AD	R	AD
C 61 2/3	S2	M2S	156	273	256.5	598.5	119	61	669.5	65	129	143	134	119
C 61 2/3	S3	M3S	195	292.5	276	642.5	142	66	738.5	74	160	155	160	142
C 61 2/3	S3	M3L	195	292.5	276	674.5	142	74	765.5	81	160	155	160	142
C 61 2/3	S4	M4	258	324	307.5	782.5	193	108	891.5	126	226	193	217	193
C 61 2/3	S4	M4LC	258	324	307.5	817.5	193	116	916.5	134	226	193	217	193
C 61 2/3	S5	M5S	310	350	333.5	869	245	136	1009	166	266	245	247	245
C 61 2/3	S5	M5L	310	350	333.5	913	245	152	1053	182	266	245	247	245
C 61 4	S1	M1S	138	264	247.5	617	108	69	680	72	103	132	124	108
C 61 4	S1	M1L	138	264	247.5	641	108	71	702	74	103	132	124	108
C 61 4	S2	M2S	156	273	256.5	669	119	75	740	78	129	143	134	119
C 61 4	S3	M3S	195	292.5	276	713	142	79	809	87	160	155	160	142
C 61 4	S3	M3L	195	292.5	276	745	142	87	836	94	160	155	160	142

www.redukto-mex.ru

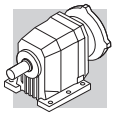

C 61...P(IEC)

P

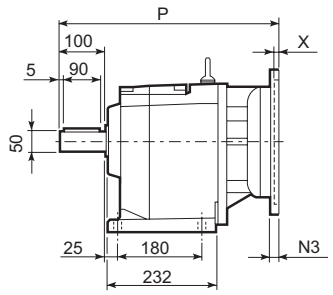

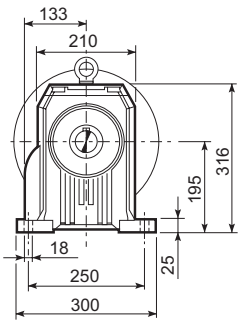

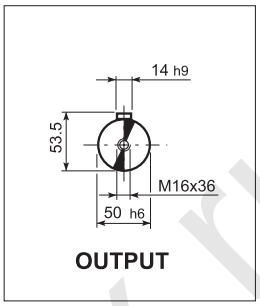

U

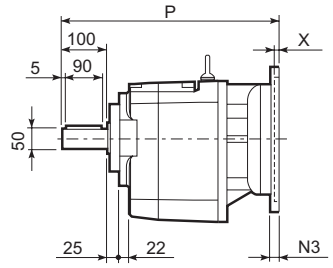

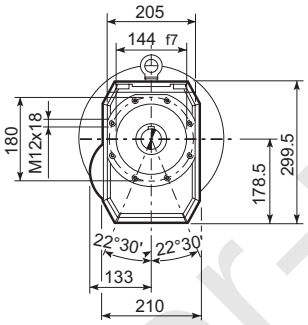

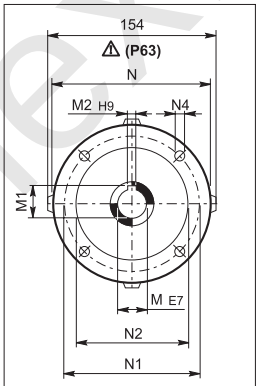

UF

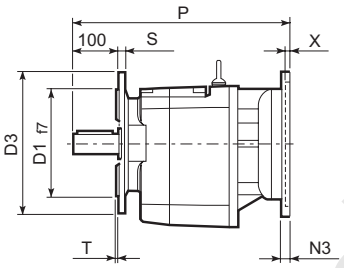

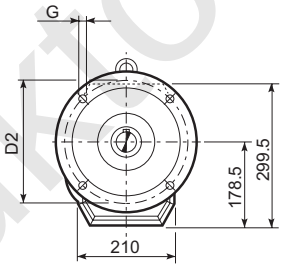

C 61_U						
	D1	D2	D3	G	T	S
FA	230	265	300	14	4	16
FB	250	300	350	18	5	18

		M	M1	M2	N	N1	N2	N3	N4	X	P	Kg
C 61 2/3	P63	11	12.8	4	140	115	95	—	M8x19	4	415.5	55
C 61 2/3	P71	14	16.3	5	160	130	110	—	M8x16	4.5	415.5	57
C 61 2/3	P80	19	21.8	6	200	165	130	—	M10x12	4	435	61
C 61 2/3	P90	24	27.3	8	200	165	130	—	M10x12	4	435	61
C 61 2/3	P100	28	31.3	8	250	215	180	—	M12x16	4.5	444	65
C 61 2/3	P112	28	31.3	8	250	215	180	—	M12x16	4.5	444	65
C 61 2/3	P132	38	41.3	10	300	265	230	16	14	5	481.5	68
C 61 2/3	P160	42	45.3	12	350	300	250	23	18	5.5	532	73
C 61 2/3	P180	48	51.8	14	350	300	250	23	18	5.5	532	73
C 61 4	P63	11	12.8	4	140	115	95	—	M8x19	4	486	61
C 61 4	P71	14	16.3	5	160	130	110	—	M8x16	4.5	489	63
C 61 4	P80	19	21.8	6	200	165	130	—	M10x12	4	505.5	67
C 61 4	P90	24	27.3	8	200	165	130	—	M10x12	4	505.5	67
C 61 4	P100	28	31.3	8	250	215	180	—	M12x16	4.5	515.5	71
C 61 4	P112	28	31.3	8	250	215	180	—	M12x16	4.5	515.5	71

www.redukt0r-mex.ru

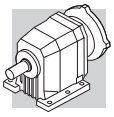

C 61...SK / SC

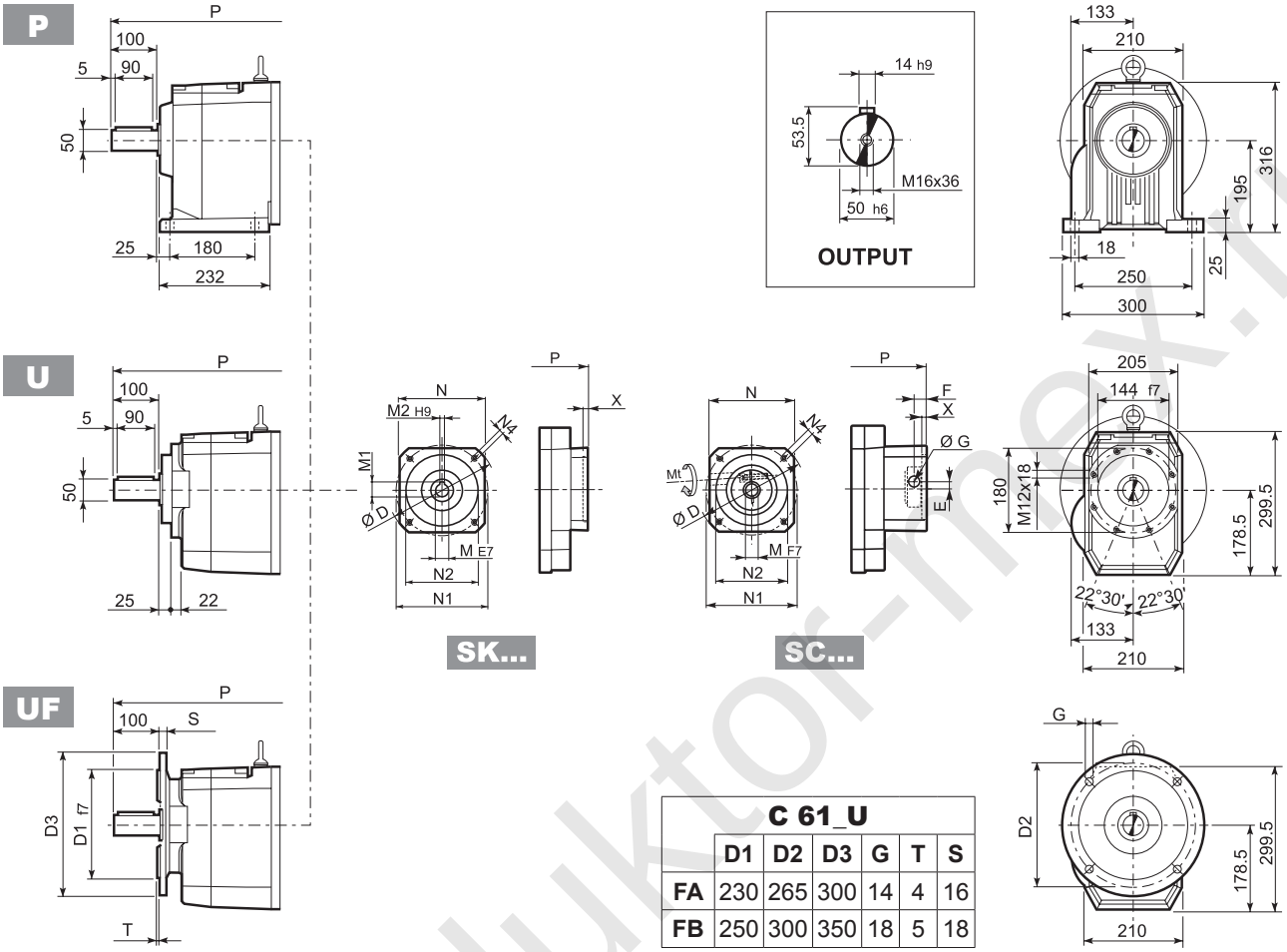

C 61_U					
	D1	D2	D3	G	T	S
FA	230	265	300	14	4	16
FB	250	300	350	18	5	18

		D	M	M1	M2	N	N1	N2	N4	X	P 2/3x	P 4x	Kg
C 61 4	SK80B	120	14	16.3	5	96	100	80	M6x12	4	—	505.5	62
C 61 2/3/4	SK80C	120	19	21.8	6	96	100	80	M6x12	4	435	505.5	63/63/69
C 61 2/3/4	SK95A	130	14	16.3	5	102	115	95	M8x12	4	435	505.5	60/60/67
C 61 2/3/4	SK95B	130	19	21.8	6	102	115	95	M8x12	4	435	505.5	63/63/69
C 61 2/3/4	SK95C	130	24	27.3	8	102	115	95	M8x12	4	435	505.5	63/63/69
C 61 2/3/4	SK110A	140	19	21.8	6	120	130	110	M8x12	5	435	505.5	63/63/69
C 61 2/3/4	SK110B	140	24	27.3	8	120	130	110	M8x12	5	435	505.5	63/63/69
C 61 2/3/4	SK130A	188	24	27.3	8	142	165	130	M10x20	5	435	505.5	67/67/80
C 61 2/3	SK130B	189	32	35.3	10	160	165	130	M10x20	5	481.5	—	72/72
C 61 2/3	SK180A	240	32	35.3	10	192	215	180	M12x19	5	481.5	—	72/72
C 61 2/3	SK180B	240	38	41.3	10	192	215	180	M12x19	5	481.5	—	66/66

			Mt	D	E	F	G	M	N	N1	N2	N4	X	P 2/3x	P 4x	Kg
C 61 4	SC80B	M6	15 Nm	120	15.5	14.5	17.75	14	96	100	80	M6x12	4	—	529	63
C 61 2/3/4	SC80C	M6	15 Nm	120	15.5	14.5	17.75	19	96	100	80	M6x12	4	458.5	529	64/64/70
C 61 2/3/4	SC95A	M6	15 Nm	130	16.5	15	17.75	14	102	115	95	M8x16	4	458.5	529	61/61/68
C 61 2/3/4	SC95B	M6	15 Nm	130	16.5	15	17.75	19	102	115	95	M8x16	4	458.5	529	64/64/70
C 61 2/3/4	SC95C	M6	15 Nm	130	16.5	15	17.75	24	102	115	95	M8x16	4	458.5	529	64/64/70
C 61 2/3/4	SC110A	M6	15 Nm	140	16.5	16	17.75	19	120	130	110	M8x16	5	458.5	529	65/65/70
C 61 2/3/4	SC110B	M6	15 Nm	140	16.5	16	17.75	24	120	130	110	M8x16	5	458.5	529	65/65/70
C 61 2/3/4	SC130A	M6	15 Nm	188	19	16	17.75	24	142	165	130	M10x20	5	458.5	529	66/66/81
C 61 2/3	SC130B	M8	36 Nm	189	20	17	17.75	32	160	165	130	M10x20	5	504.5	—	75/75
C 61 2/3	SC180A	M8	36 Nm	240	20	17.5	17.75	32	192	215	180	M12x24	5	508.5	—	75/75
C 61 2/3	SC180B	M8	36 Nm	240	20	17.5	17.75	38	192	215	180	M12x24	5	508.5	—	69/69

www.reduktor-mex.ru

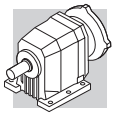

C 61...HS

P

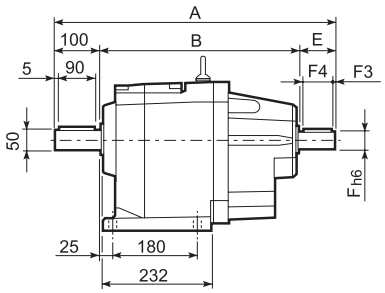

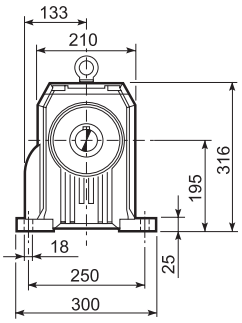

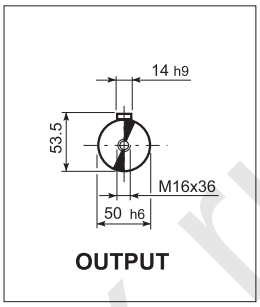

U

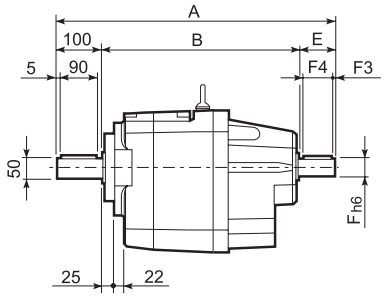

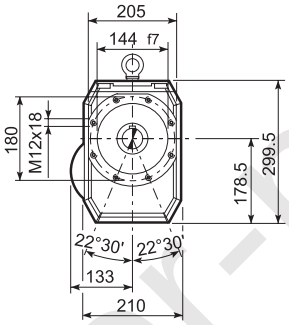

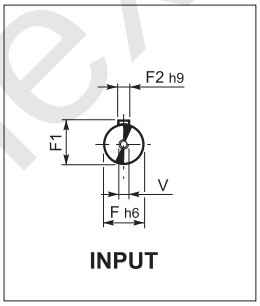

UF

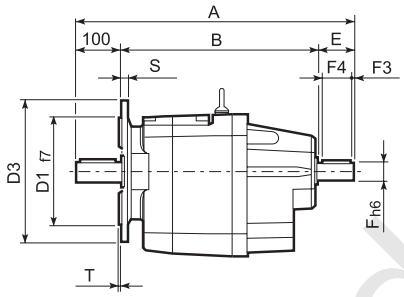

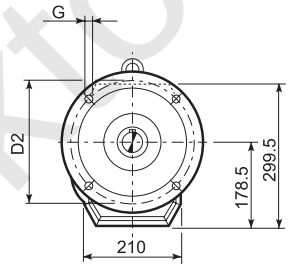

C 61_U						
	D1	D2	D3	G	T	S
FA	230	265	300	14	4	16
FB	250	300	350	18	5	18

		A	B	E	F	F1	F2	F3	F4	V	Kg
C 61 2	**HS**	532	372	60	28	31	8	5	50	M10x22	66
C 61 3		532	372	60	28	31	8	5	50	M10x22	66
C 61 4		575	425	50	24	27	8	2.5	45	M8x19	72

www.redukto-mex.ru

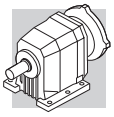

C 70...M

P

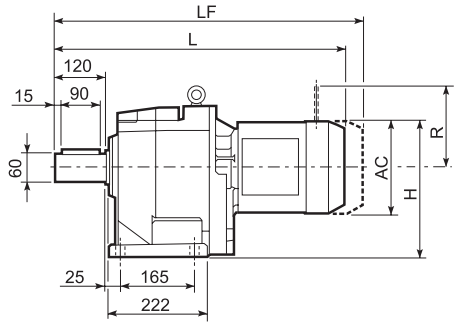

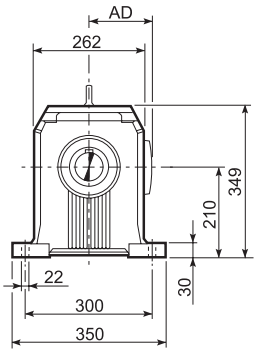

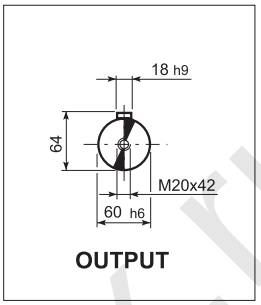

F

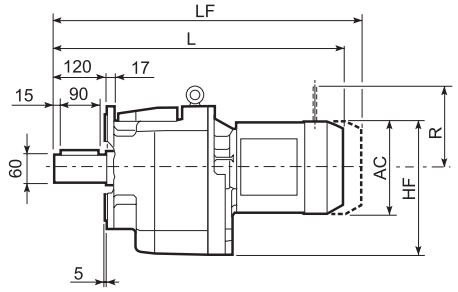

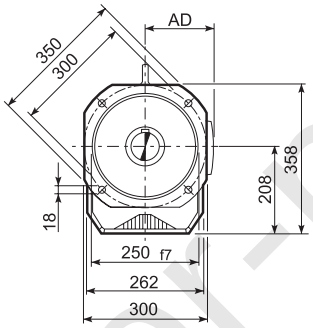

									M...FD M...FA		M...FD		M...FA	
			AC	H	HF	L	AD	Kg	LF	Kg	R	AD	R	AD
C 70 2/3	**S2**	**M2S**	156	288	286	636.5	119	88	707.5	92	129	146	134	119
C 70 2/3	**S3**	**M3S**	195	307.5	305.5	680.5	142	93	776.5	101	160	158	160	142
C 70 2/3	**S3**	**M3L**	195	307.5	305.5	712.5	142	101	803.5	108	160	158	160	142
C 70 2/3	**S4**	**M4**	258	339	337	820.5	193	135	929.5	153	226	210	217	193
C 70 2/3	**S4**	**M4LC**	258	339	337	855.5	193	143	954.5	161	226	210	217	193
C 70 2/3	**S5**	**M5S**	310	365	363	907	245	163	1047	193	266	245	247	245
C 70 2/3	**S5**	**M5L**	310	365	363	951	245	179	1091	209	266	245	247	245
C 70 4	**S1**	**M1**	138	279	277	659.5	108	88	720.5	91	103	135	124	108
C 70 4	**S2**	**M2S**	156	288	286	687.5	119	92	758.5	96	129	146	134	119
C 70 4	**S3**	**M3S**	195	307.5	305.5	731.5	142	97	827.5	104	160	158	160	142
C 70 4	**S3**	**M3L**	195	307.5	305.5	763.5	142	104	854.5	111	160	158	160	142
C 70 4	**S4**	**M4**	258	339	337	871.5	193	138	980.5	156	226	210	217	193
C 70 4	**S4**	**M4LC**	258	339	337	906.5	193	146	1005.5	164	226	210	217	193

www.reduktor-mex.ru

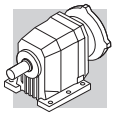

C 70...P(IEC)

P

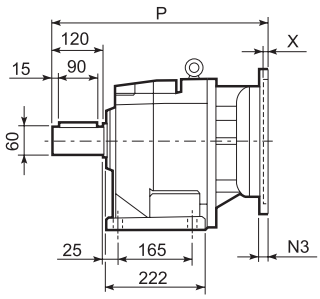

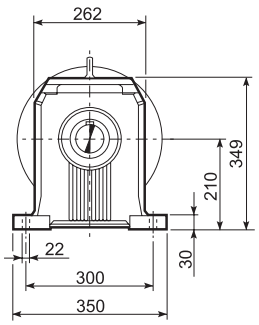

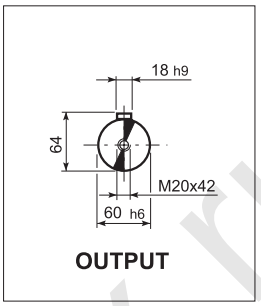

F

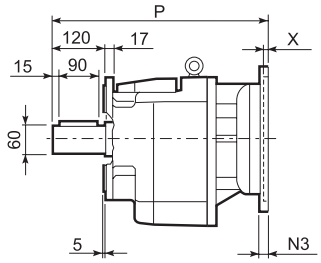

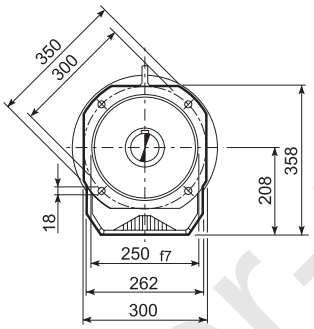

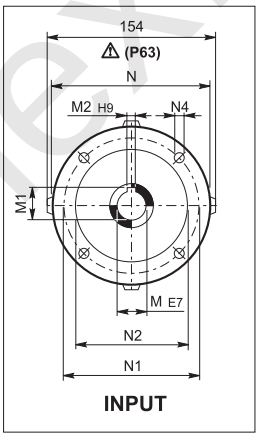

		M	M1	M2	N	N1	N2	N3	N4	X	P	Kg
C 70 2/3	**P80**	19	21.8	6	200	165	130	—	M10x12	4	473	88
C 70 2/3	**P90**	24	27.3	8	200	165	130	—	M10x12	4	473	88
C 70 2/3	**P100**	28	31.3	8	250	215	180	—	M12x16	4.5	483	92
C 70 2/3	**P112**	28	31.3	8	250	215	180	—	M12x16	4.5	483	92
C 70 2/3	**P132**	38	41.3	10	300	265	230	16	14	5	519.5	95
C 70 2/3	**P160**	42	45.3	12	350	300	250	23	18	6	575	107
C 70 2/3	**P180**	48	51.8	14	350	300	250	23	18	6	575	107
C 70 2	**P200**	55	59.3	16	400	350	300	—	M16x25	7	600	129
C 70 4	**P63**	11	12.8	4	140	115	95	—	M8x19	4	504.5	91
C 70 4	**P71**	14	16.3	5	160	130	110	—	M8x16	4.5	504.5	91
C 70 4	**P80**	19	21.8	6	200	165	130	—	M10x12	4	524	92
C 70 4	**P90**	24	27.3	8	200	165	130	—	M10x12	4	524	92
C 70 4	**P100**	28	31.3	8	250	215	180	—	M12x16	4.5	534	96
C 70 4	**P112**	28	31.3	8	250	215	180	—	M12x16	4.5	534	96
C 70 4	**P132**	38	41.3	10	300	265	230	16	14	5	570.5	98

www.reduktor-mex.ru

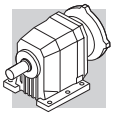

C 70...HS

P

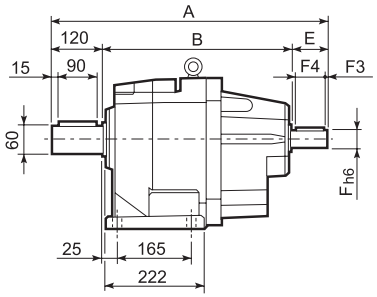

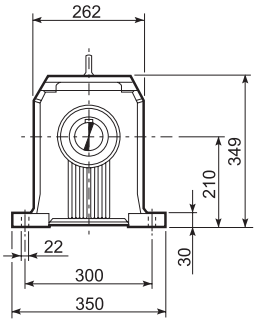

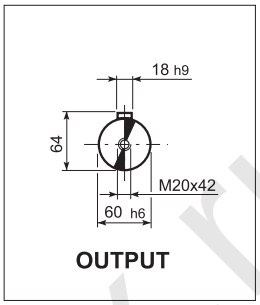

F

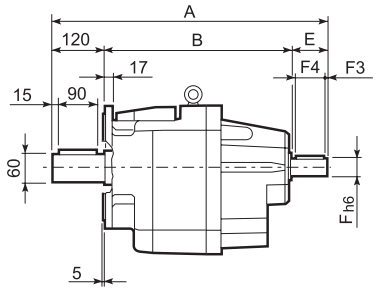

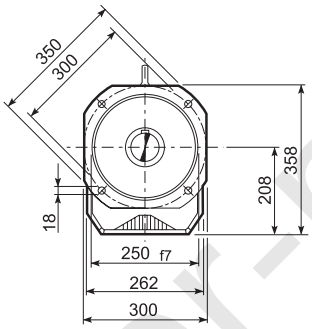

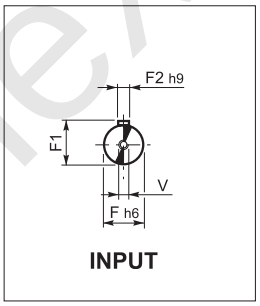

		A	B	E	F	F1	F2	F3	F4	V	Kg
C 70 2	**HS**	657.5	427.5	110	42	45	12	10	90	M12x28	108
C 70 3		657.5	427.5	110	42	45	12	10	90	M12x28	108
C 70 4		593.5	423.5	50	24	27	8	2.5	45	M8x19	94

www.reduktor-mex.ru

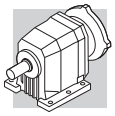

C 80...M

P

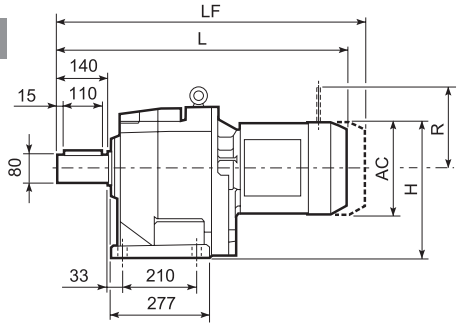

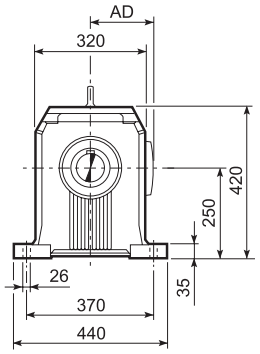

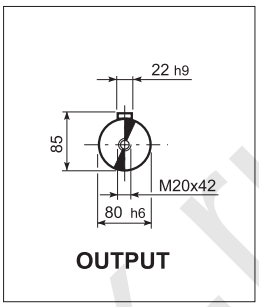

F

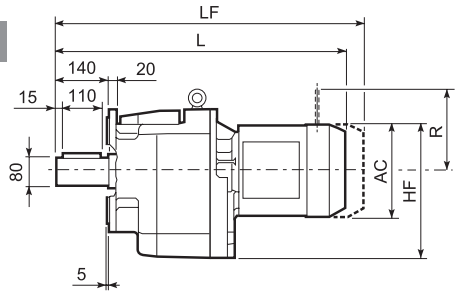

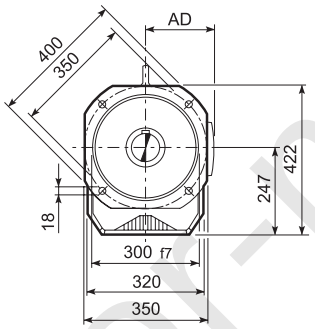

									M...FD M...FA		M...FD		M...FA	
			AC	H	HF	L	AD	Kg	LF	Kg	R	AD	R	AD
C 80 2/3	**S3**	**M3S**	195	347.5	344.5	742.5	142	139	838.5	146	160	158	160	142
C 80 2/3	**S3**	**M3L**	195	347.5	344.5	774.5	142	146	865.5	153	160	158	160	142
C 80 2/3	**S4**	**M4**	258	379	376	882.5	193	180	991.5	196	226	210	217	193
C 80 2/3	**S4**	**M4LC**	258	379	376	917.5	193	188	1016.5	204	226	210	217	193
C 80 2/3	**S5**	**M5S**	310	405	402	969	245	208	1109	238	266	245	247	245
C 80 2/3	**S5**	**M5L**	310	405	402	1013	245	224	1153	254	266	245	247	245
C 80 4	**S1**	**M1**	138	319	316	733.5	108	133	794.5	136	103	135	124	108
C 80 4	**S2**	**M2S**	156	328	325	761.5	119	137	832.5	141	129	146	134	119
C 80 4	**S3**	**M3S**	195	347.5	344.5	805.5	142	142	901.5	149	160	158	160	142
C 80 4	**S3**	**M3L**	195	347.5	344.5	837.5	142	149	928.5	156	160	158	160	142
C 80 4	**S4**	**M4**	258	379	376	945.5	193	183	1054.5	201	226	210	217	193
C 80 4	**S4**	**M4LC**	258	379	376	980.5	193	191	1079.5	209	226	210	217	193

www.reduktor-mex.ru

P

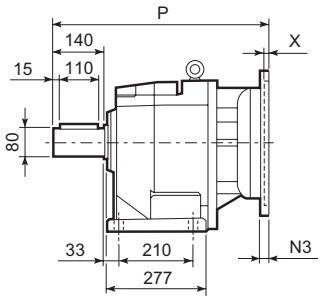

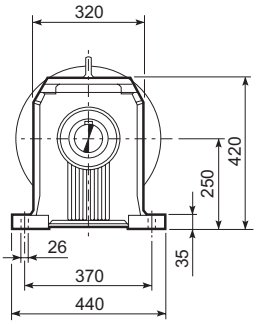

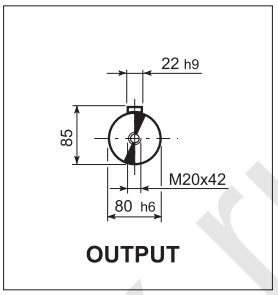

F

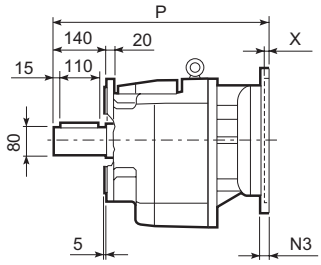

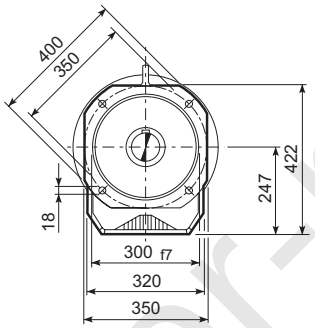

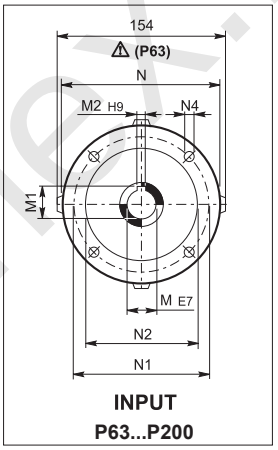

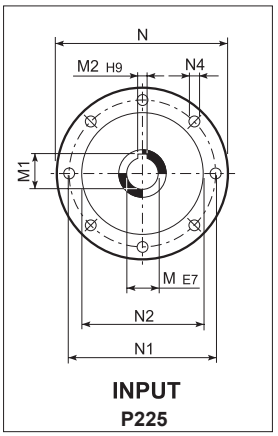

		M	M1	M2	N	N1	N2	N3	N4	X	P	Kg
C 80 2/3	**P80**	19	21.8	6	200	165	130	—	M10x12	4	533	135
C 80 2/3	**P90**	24	27.3	8	200	165	130	—	M10x12	4	533	135
C 80 2/3	**P100**	28	31.3	8	250	215	180	—	M12x16	4.5	543	139
C 80 2/3	**P112**	28	31.3	8	250	215	180	—	M12x16	4.5	543	139
C 80 2/3	**P132**	38	41.3	10	300	265	230	16	14	5	579.5	141
C 80 2/3	**P160**	42	45.3	12	350	300	250	23	18	6	635	154
C 80 2/3	**P180**	48	51.8	14	350	300	250	23	18	6	635	154
C 80 2	**P200**	55	59.3	16	400	350	300	—	M16x25	7	660	176
C 80 2	**P225**	60	64.4	18	450	400	350	25	18	6	705.5	178
C 80 4	**P63**	11	12.8	4	140	115	95	—	M8x19	4	576.5	138
C 80 4	**P71**	14	16.3	5	160	130	110	—	M8x16	4.5	576.5	138
C 80 4	**P80**	19	21.8	6	200	165	130	—	M10x12	4	596	140
C 80 4	**P90**	24	27.3	8	200	165	130	—	M10x12	4	596	140
C 80 4	**P100**	28	31.3	8	250	215	180	—	M12x16	4.5	606	144
C 80 4	**P112**	28	31.3	8	250	215	180	—	M12x16	4.5	606	144
C 80 4	**P132**	38	41.3	10	300	265	230	16	M12x16	5	642.5	146

www.reduktor-mex.ru

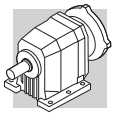

C 80...HS

P

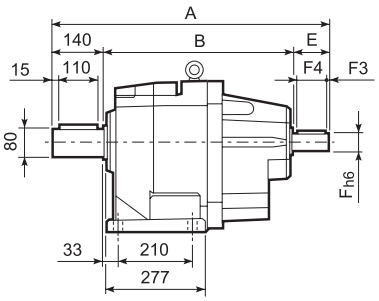

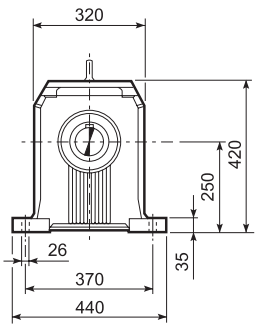

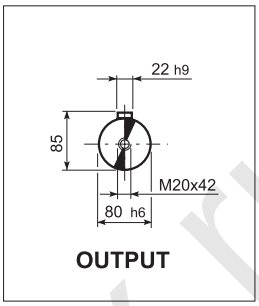

F

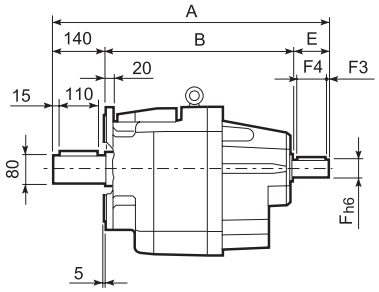

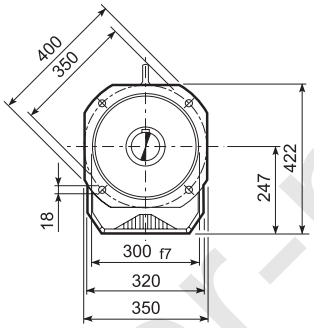

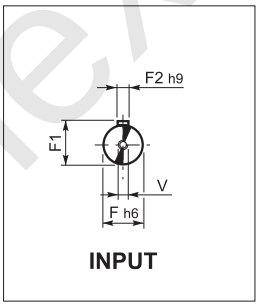

		A	B	E	F	F1	F2	F3	F4	V	Kg
C 80 2	**HS**	718.5	468.5	110	42	45	12	10	90	M12x28	154
C 80 3		718.5	468.5	110	42	45	12	10	90	M12x28	154
C 80 4		666.5	476.5	50	24	27	8	2.5	45	M8x19	141

www.reduktor-mex.ru

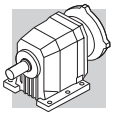

C 90...M

P

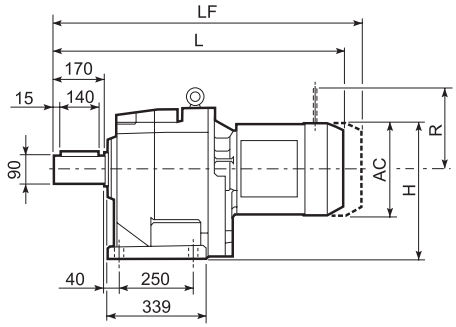

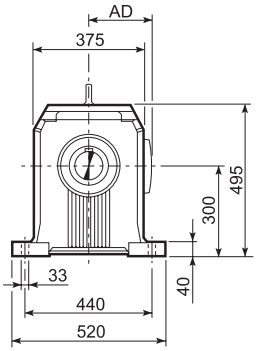

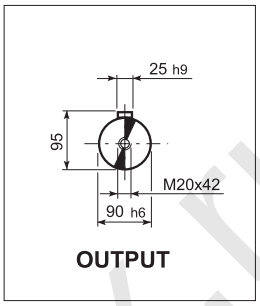

F

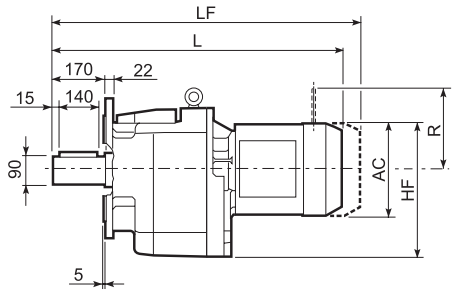

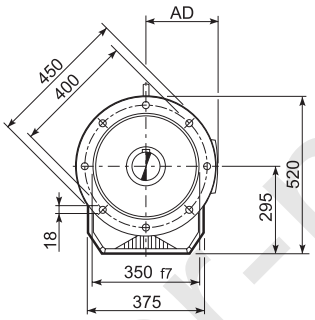

									M...FD M...FA		M...FD		M...FA	
			AC	H	HF	L	AD	Kg	LF	Kg	R	AD	R	AD
C 90 2/3	**S3**	**M3S**	195	397.5	392.5	852	142	228	948	236	160	158	160	142
C 90 2/3	**S3**	**M3L**	195	397.5	392.5	884	142	236	975	243	160	158	160	142
C 90 2/3	**S4**	**M4**	258	429	424	992	193	270	1101	288	226	210	217	193
C 90 2/3	**S4**	**M4LC**	258	429	424	1027	193	278	1126	296	226	210	217	193
C 90 2/3	**S5**	**M5S**	310	455	450	1078.5	245	298	1218.5	328	266	245	247	245
C 90 2/3	**S5**	**M5L**	310	455	450	1122.5	245	314	1262.5	344	266	245	247	245
C 90 4	**S1**	**M1**	138	369	364	862	108	226	923	228	103	135	124	108
C 90 4	**S2**	**M2S**	156	378	373	891	119	234	962	238	129	146	134	119
C 90 4	**S3**	**M3S**	195	397.5	392.5	935	142	239	1031	246	160	158	160	142
C 90 4	**S3**	**M3L**	195	397.5	392.5	967	142	246	1058	253	160	158	160	142
C 90 4	**S4**	**M4**	258	429	424	1075	193	280	1184	298	226	210	217	193
C 90 4	**S4**	**M4LC**	258	429	424	1126.5	193	288	1209	306	226	210	217	193

www.reduktor-imex.ru

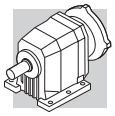

C 90...P(IEC)

P

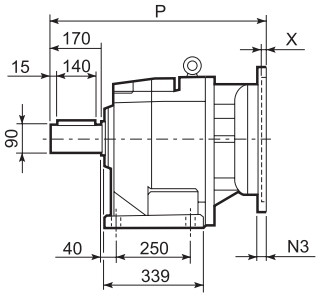

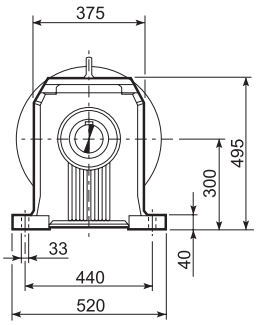

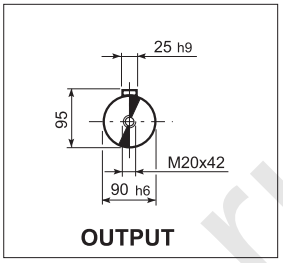

F

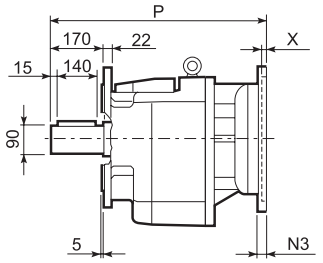

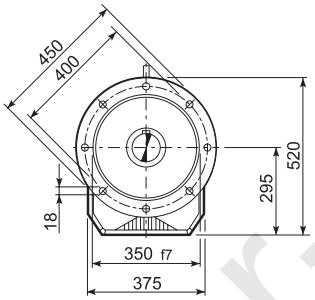

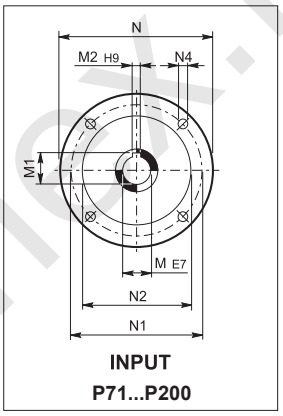

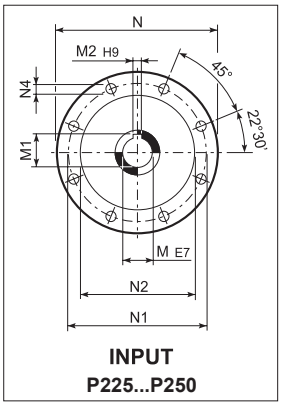

		M	M1	M2	N	N1	N2	N3	N4	X	P	Kg
C 90 2/3	**P80**	19	21.8	6	200	165	130	—	M10x12	4	644.5	229
C 90 2/3	**P90**	24	27.3	8	200	165	130	—	M10x12	4	644.5	229
C 90 2/3	**P100**	28	31.3	8	250	215	180	—	M12x16	4.5	654.5	234
C 90 2/3	**P112**	28	31.3	8	250	215	180	—	M12x16	4.5	654.5	234
C 90 2/3	**P132**	38	41.3	10	300	265	230	16	14	5	691	236
C 90 2/3	**P160**	42	45.3	12	350	300	250	23	18	6	746.5	251
C 90 2/3	**P180**	48	51.8	14	350	300	250	23	18	6	746.5	251
C 90 2/3	**P200**	55	59.3	16	400	350	300	—	M16x25	7	771.5	272
C 90 2/3	**P225**	60	64.4	18	450	400	350	30	18	6	817	273
C 90 2/3	**P250**	65	69.4	18	550	500	450	30	18	6	847	295
C 90 4	**P63**	11	12.8	4	140	115	95	—	M8x19	4	707.5	236
C 90 4	**P71**	14	16.3	5	160	130	110	—	M8x16	4.5	707.5	236
C 90 4	**P80**	19	21.8	6	200	165	130	—	M10x12	4	727	238
C 90 4	**P90**	24	27.3	8	200	165	130	—	M10x12	4	727	238
C 90 4	**P100**	28	31.3	8	250	215	180	—	M12x16	4.5	737	242
C 90 4	**P112**	28	31.3	8	250	215	180	—	M12x16	4.5	737	242
C 90 4	**P132**	38	41.3	10	300	265	230	16	14	5	773.5	244
C 90 4	**P160**	42	45.3	12	350	300	250	23	18	5.5	824	248
C 90 4	**P180**	48	51.8	14	350	300	250	23	18	5.5	824	248

www.reduktor-mex.ru

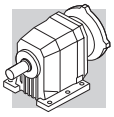

C 90...HS

P

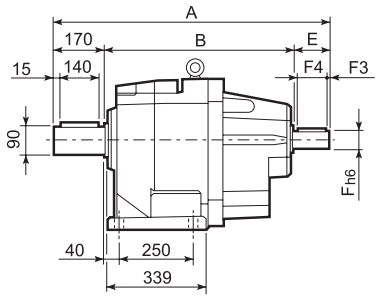

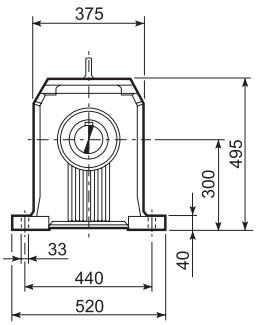

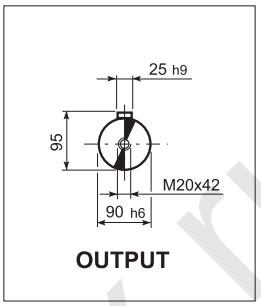

F

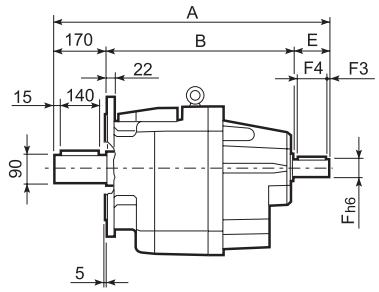

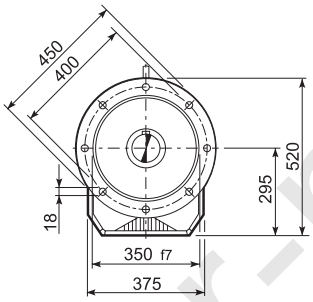

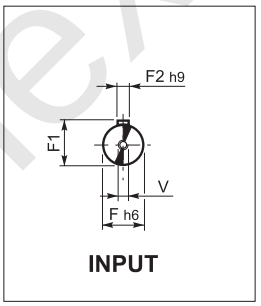

		A	B	E	F	F1	F2	F3	F4	V	Kg
C 90 2	**HS**	930.5	620.5	140	60	64	18	10	120	M16x36	273
C 90 3		930.5	620.5	140	60	64	18	10	120	M16x36	273
C 90 4		797	577	50	24	27	8	2.5	45	M8x19	240

www.reduktor-mex.ru

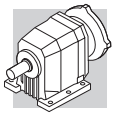

C 100...M

P

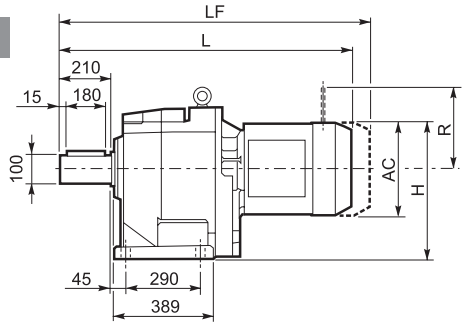

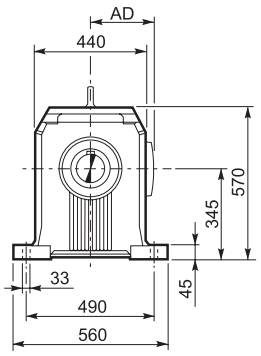

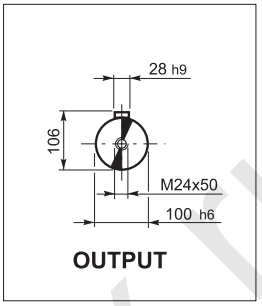

F

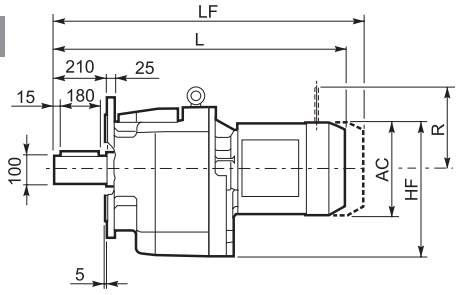

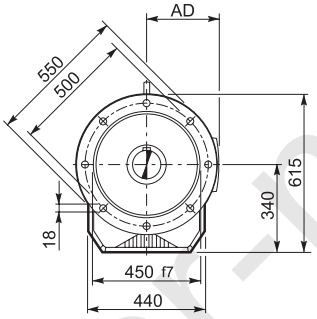

									M...FD M...FA		M...FD		M...FA	
			AC	H	HF	L	AD	Kg	LF	Kg	R	AD	R	AD
C 100 2/3	**S4**	**M4**	258	474	469	1087	193	392	1196	410	226	210	217	193
C 100 2/3	**S4**	**M4LC**	258	474	469	1122	193	400	1221	418	226	210	217	193
C 100 2/3	**S5**	**M5S**	310	500	495	1173.5	245	420	1313.5	450	266	245	247	245
C 100 2/3	**S5**	**M5L**	310	500	495	1217.5	245	436	1357.5	466	266	245	247	245
C 100 4	**S1**	**M1**	138	414	409	956.5	108	346	1027.5	348	103	135	124	108
C 100 4	**S2**	**M2S**	156	423	418	985.5	119	354	1056.5	357	129	146	134	119
C 100 4	**S3**	**M3S**	195	442.5	437.5	1029.5	142	358	1125.5	366	160	158	160	142
C 100 4	**S3**	**M3L**	195	442.5	437.5	1061.5	142	366	1152.5	373	160	158	160	142
C 100 4	**S4**	**M4**	258	474	469	1169.5	193	400	1278.5	418	226	210	217	193
C 100 4	**S4**	**M4LC**	258	474	469	1204.5	245	408	1303.5	426	226	210	217	193

www.reduktor-imex.ru

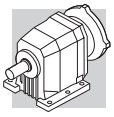

C 100...P(IEC)

P

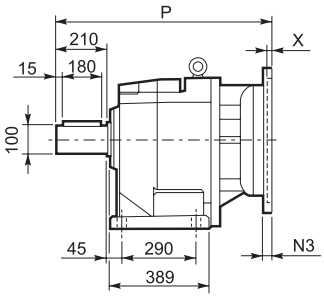

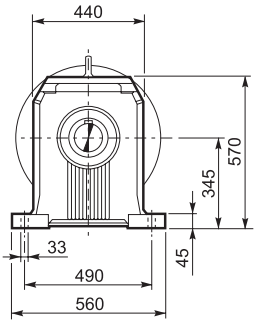

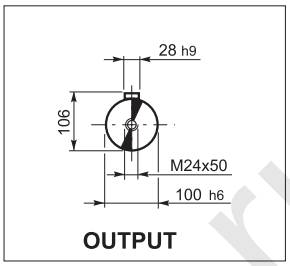

F

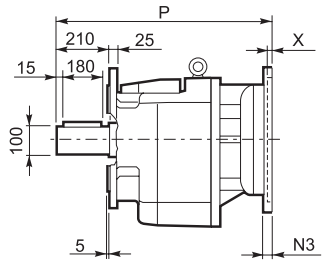

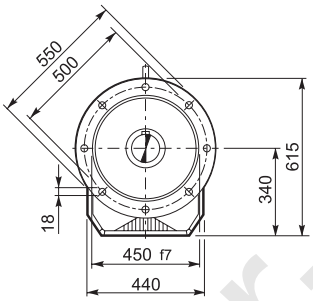

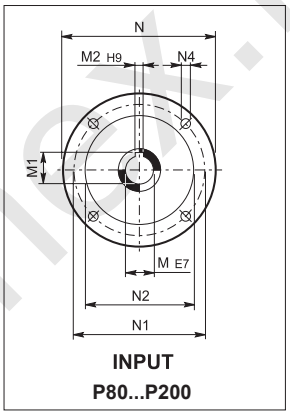

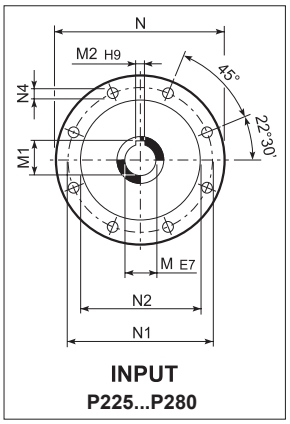

		M	M1	M2	N	N1	N2	N3	N4	X	P	Kg
C 100 2/3	**P100**	28	31.3	8	250	215	180	—	M12x16	4.5	749.5	364
C 100 2/3	**P112**	28	31.3	8	250	215	180	—	M12x16	4.5	749.5	364
C 100 2/3	**P132**	38	41.3	10	300	265	230	16	14	5	786	367
C 100 2/3	**P160**	42	45.3	12	350	300	250	23	18	6	841.5	382
C 100 2/3	**P180**	48	51.8	14	350	300	250	23	18	6	841.5	382
C 100 2/3	**P200**	55	59.3	16	400	350	300	—	M16x25	7	866.5	403
C 100 2/3	**P225**	60	64.4	18	450	400	350	30	18	7	912	403
C 100 2/3	**P250**	65	69.4	18	550	500	450	30	18	7	942	426
C 100 2/3	**P280**	75	79.9	20	550	500	450	30	18	6	942	426
C 100 4	**P63**	11	12.8	4	140	115	95	—	M8x19	4	803	369
C 100 4	**P71**	14	16.3	5	160	130	110	—	M8x16	4.5	803	369
C 100 4	**P80**	19	21.8	6	200	165	130	—	M10x12	4	822.5	371
C 100 4	**P90**	24	27.3	8	200	165	130	—	M10x12	4	822.5	371
C 100 4	**P100**	28	31.3	8	250	215	180	—	M12x16	4.5	832.5	375
C 100 4	**P112**	28	31.3	8	250	215	180	—	M12x16	4.5	832.5	375
C 100 4	**P132**	38	41.3	10	300	265	230	16	14	5	869	377
C 100 4	**P160**	42	45.3	12	350	300	250	23	18	5.5	919.5	381
C 100 4	**P180**	48	51.8	14	350	300	250	23	18	5.5	919.5	381

www.reduktor-max.ru

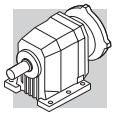

C 100...HS

P

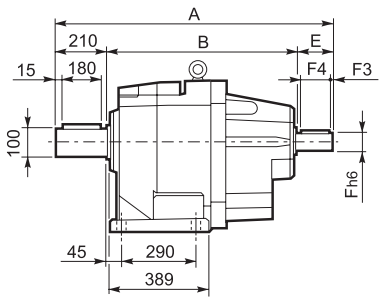

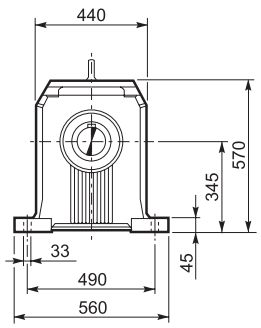

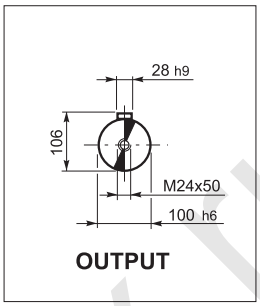

F

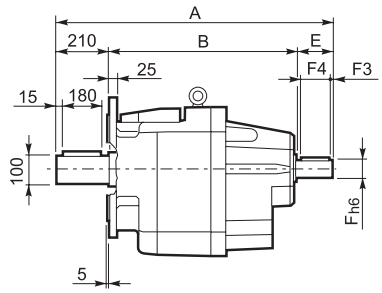

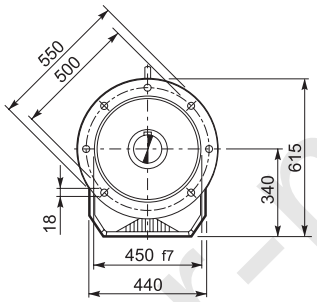

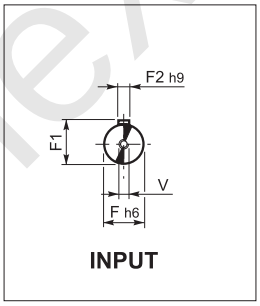

		A	B	E	F	F1	F2	F3	F4	V	Kg
C 100 2	**HS**	1025.5	676	140	60	64	18	10	120	M16x36	409
C 100 3		1025.5	676	140	60	64	18	10	120	M16x36	409
C 100 4		892	632	50	24	27	8	2.5	45	M8x19	372

www.reduktor-mex.ru